67530
Rev 02

Kwikset

ENGLISH

905 Keyless Entry Touchpad Deadbolt

Installation and User Guide

Required tools

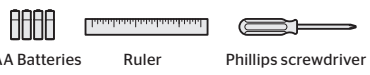

Additional Tools (depending on application)

Kwikset Technical Support
1-800-327-5625
www.kwikset.com

Parts in the box

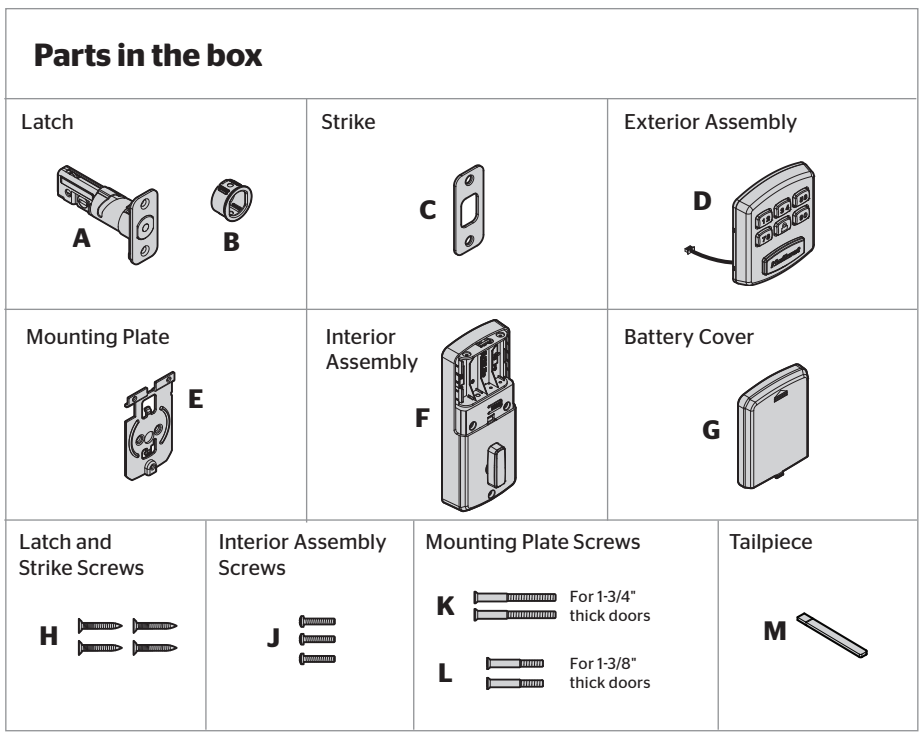

1 Prepare the door and check dimensions

If drilling a new door, use the supplied template and the complete door drilling instructions available at www.kwikset.com/doorprep

A Measure to confirm that the hole in the door is 2-1/8" (54 mm).

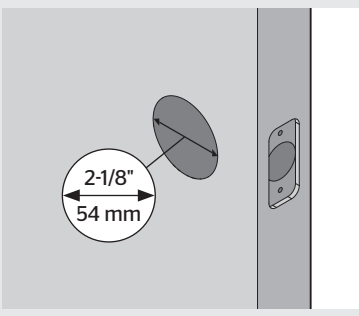

B Measure to confirm that the backset is either 2-3/8" or 2-3/4" (60 or 70 mm).

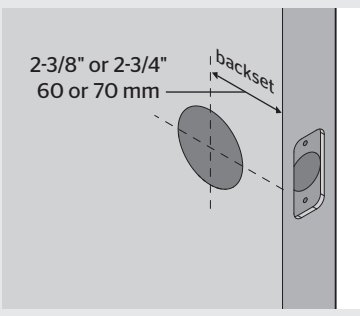

C Measure to confirm that the hole in the door edge is 1" (25 mm).

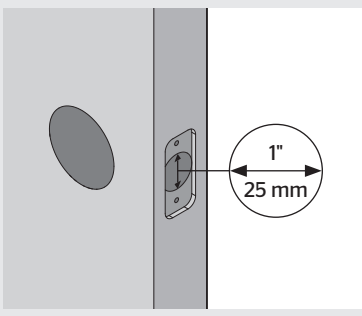

D Measure to confirm that the door is either 1-3/8" or 1-3/4" (35 mm or 45 mm) thick.

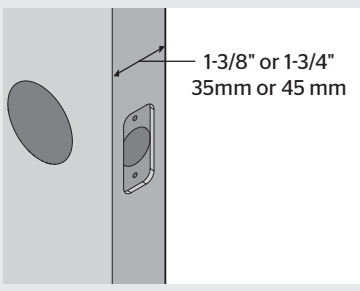

2 Install the latch and strike

A Hold the latch in front of the door hole, with the latch face flush against the door edge.

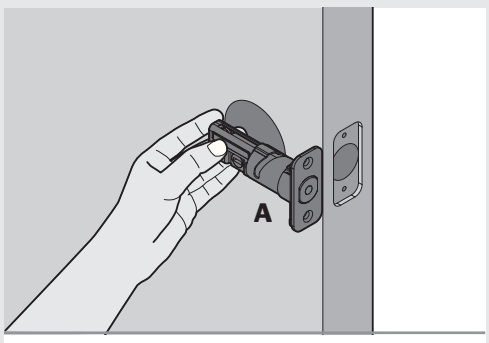

Is the slotted hole centered in the door hole?

YES

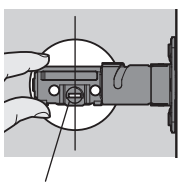

slotted hole is centered

No adjustment is required. Proceed to next step.

or

NO

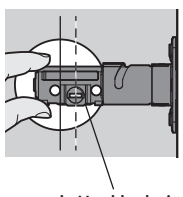

slotted hole is NOT centered

Rotate latch face as shown to extend latch.

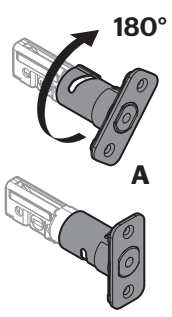

B Is the door edge chiseled?

Yes

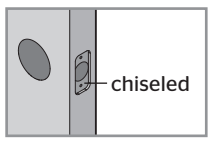

Install latch in door with supplied screws.

or

NO

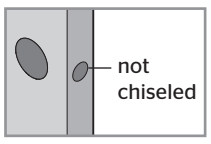

Use a flathead screwdriver to lift tabs on collar of rectangular face to remove it from latch. Install drive-in collar.

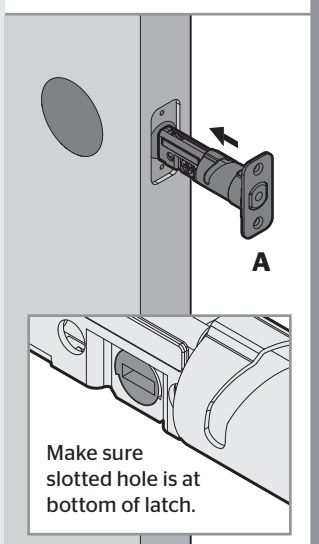

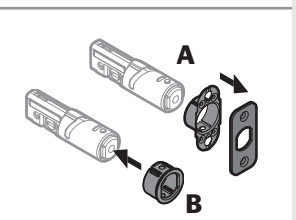

Align tabs with holes in collar.

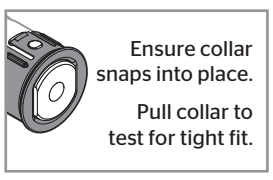

Ensure collar snaps into place.

Pull collar to test for tight fit.

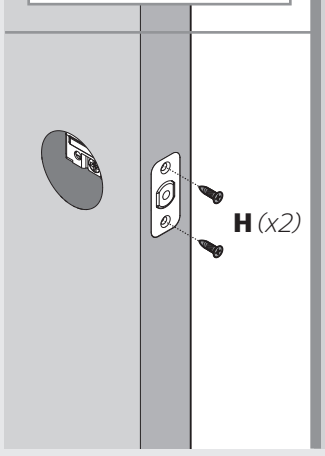

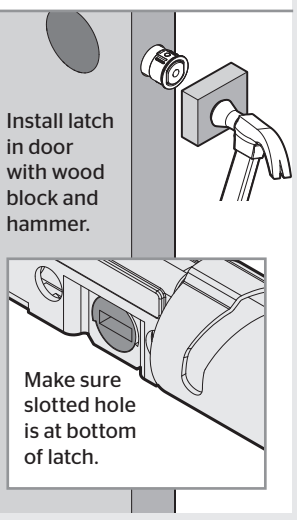

C Install strike on the door frame.

⚠ Make sure hole in door frame is drilled a minimum of 1" (25 mm) deep.

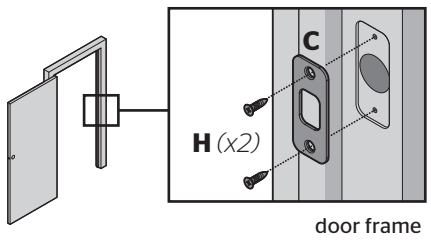

3 Install exterior assembly

A Route the cable below the latch.

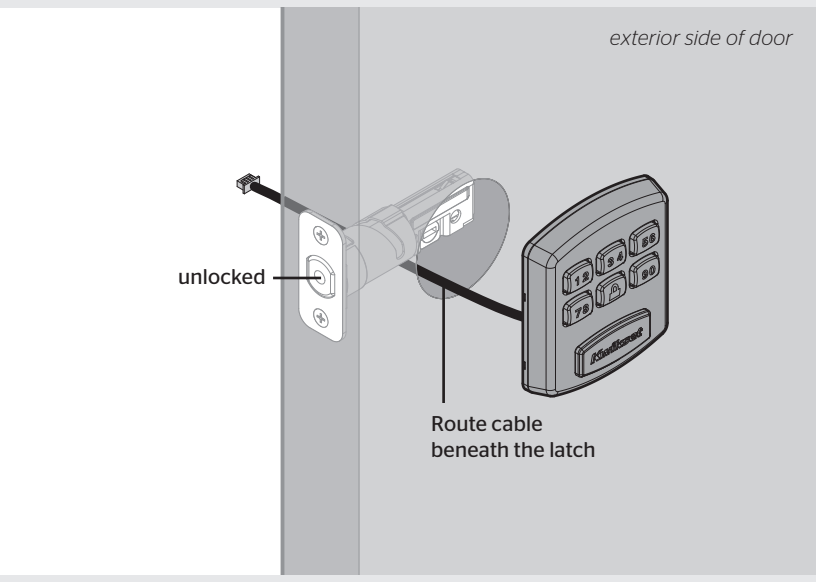

B ⚠ **IMPORTANT:** Hold the exterior assembly on the outside firmly (or have a second pair of hands) for the next steps.

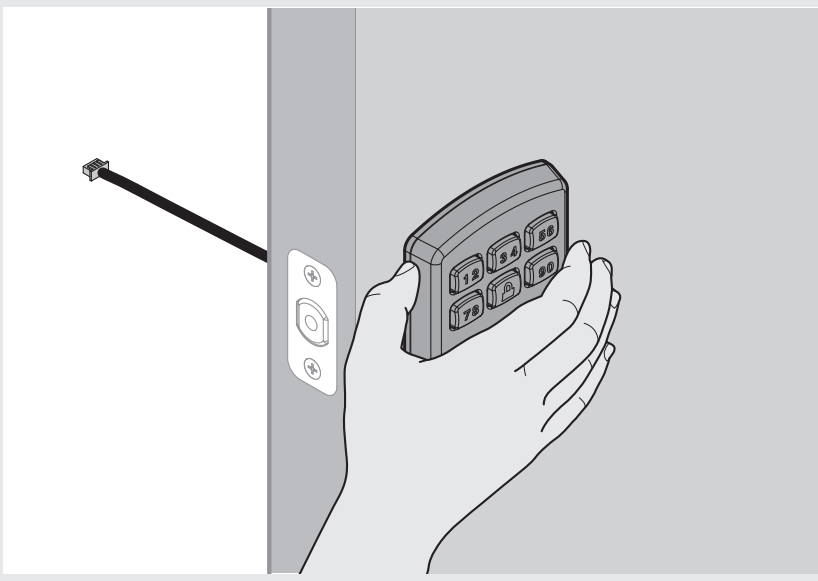

C Push the cable through the bottom hole.

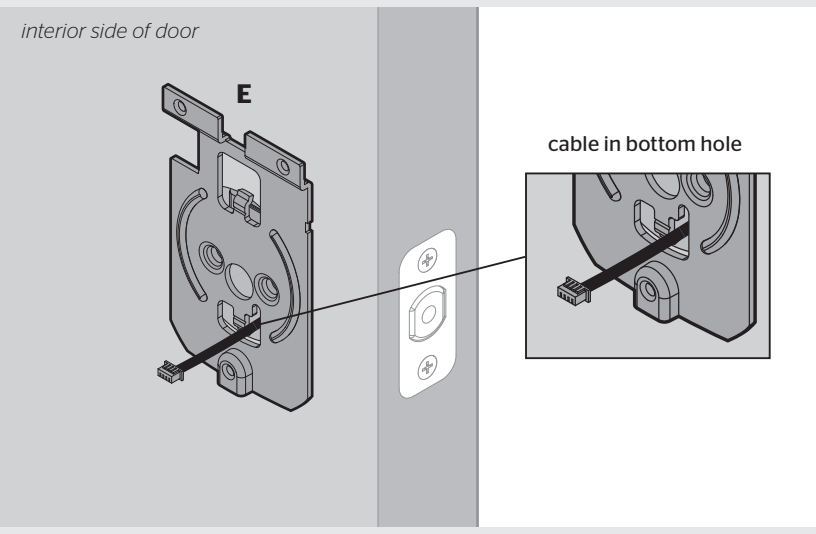

D Secure the mounting plate with the supplied screws.

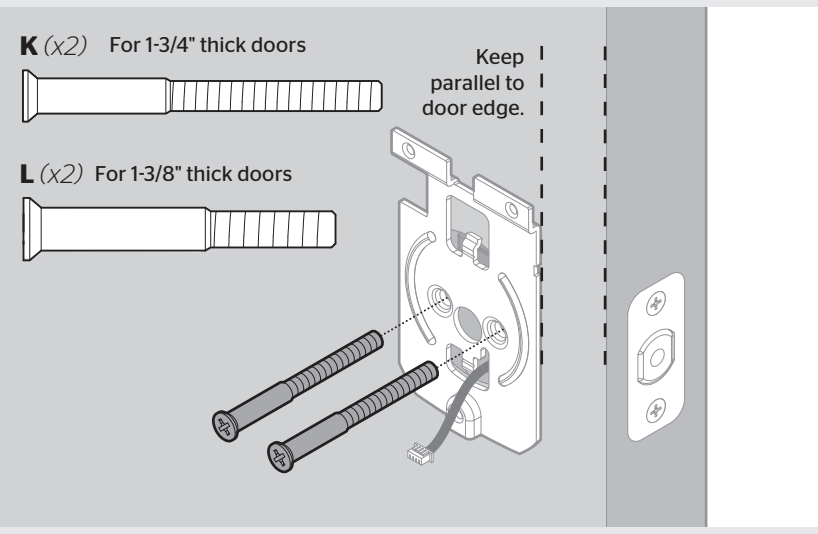

4 Install interior assembly

A Insert the tailpiece into the slot of the latch.

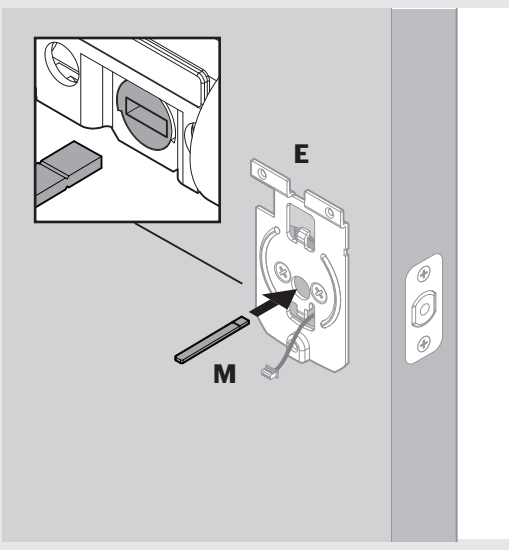

B Align the colored edges of the connectors and ensure a tight cable connection.

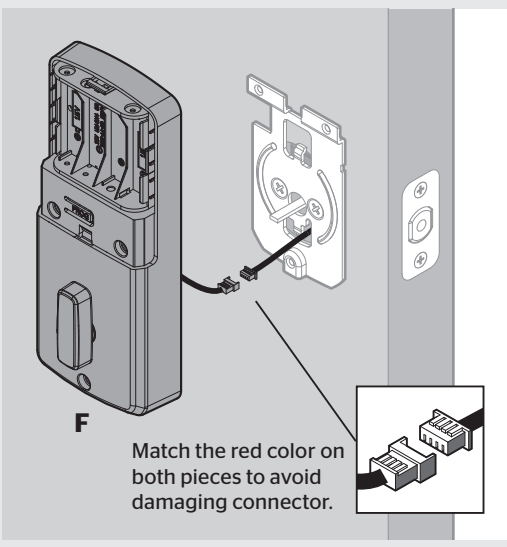

C Install the interior assembly.

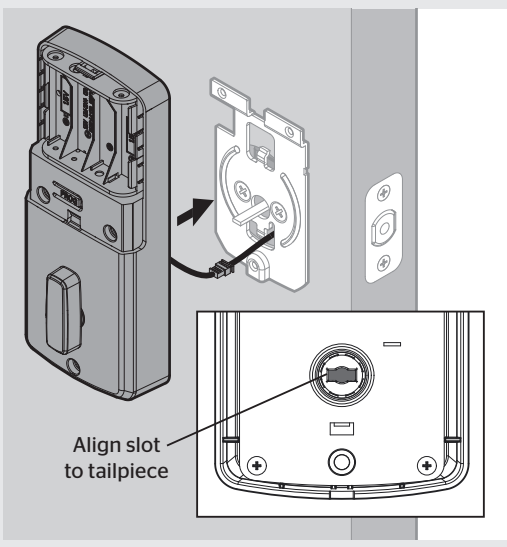

D Test the turnpiece rotation. It may feel heavy and this is by design.

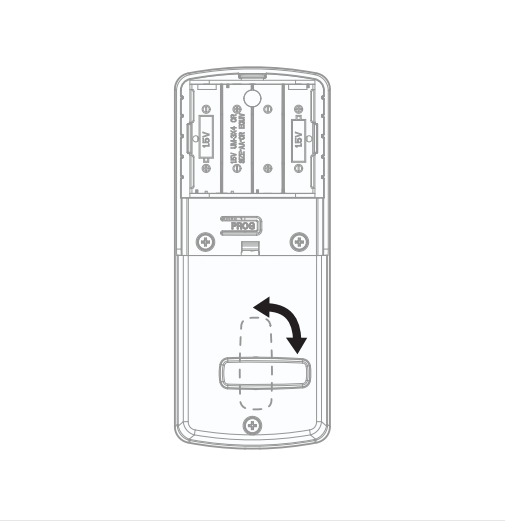

E Secure the interior assembly with the supplied screws.

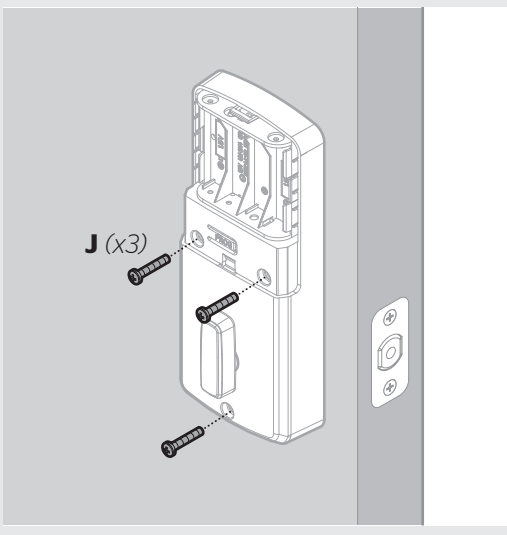

F Load 4 AA batteries into the interior assembly. For best results, use new, non-rechargeable alkaline batteries only.

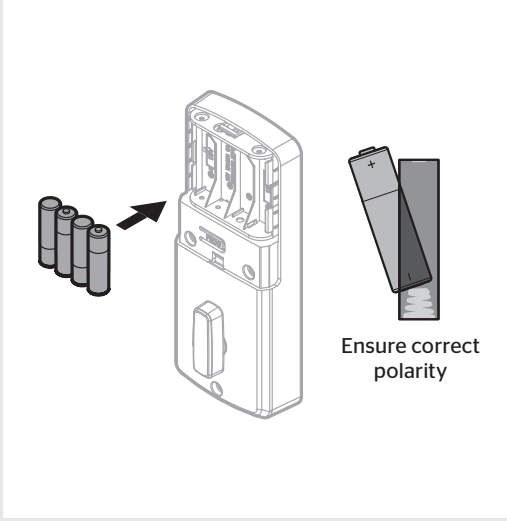

5 Set Locking and Unlocking Direction

What is the location of the latch?

Left-Locking Latch
If bolt goes left

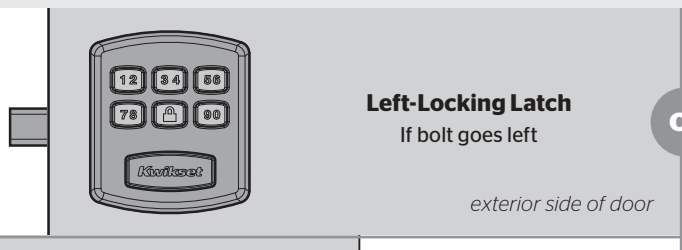

or

Right-Locking Latch
If bolt goes right

A Press and release **PROG**. You will hear 2 long beeps.

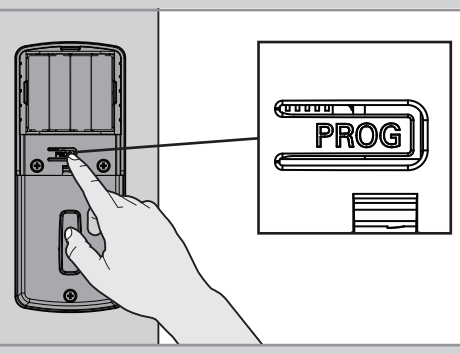

A Press and release **PROG**. You will hear 2 long beeps.

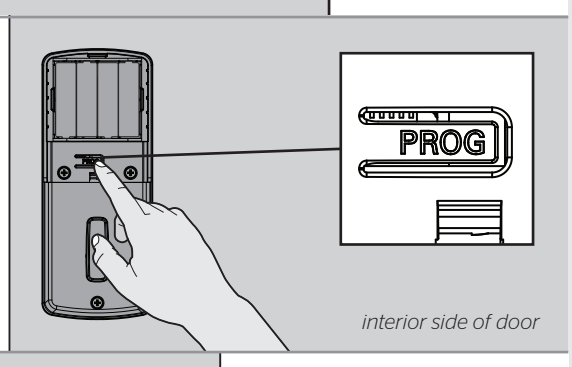

B Press 🔒

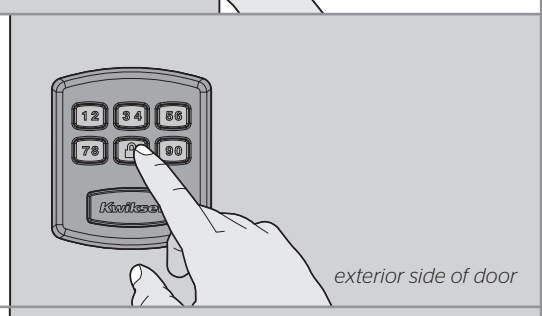

B Press 🔒

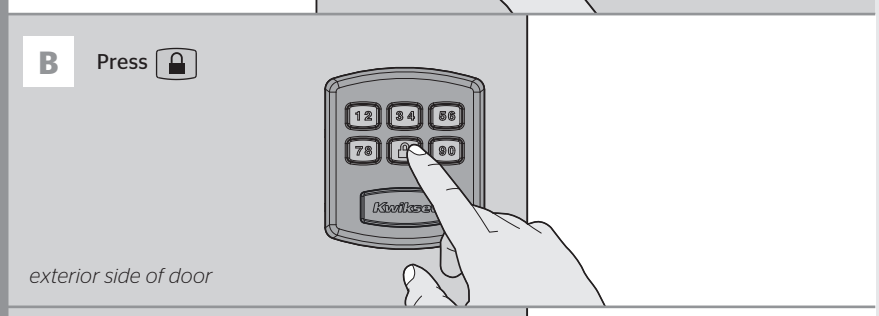

C Press 12

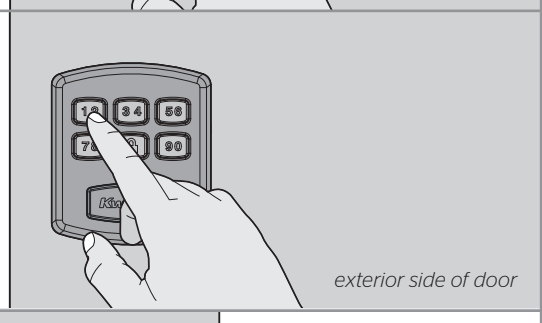

C Press 56

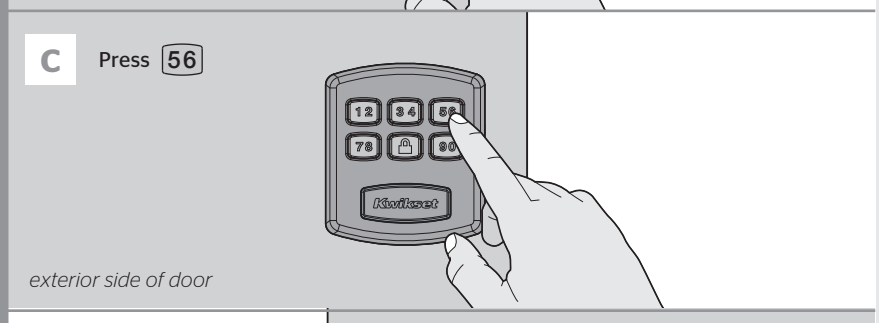

D Press **PROG**. You will hear 1 long beep. If not, repeat the process from step A.

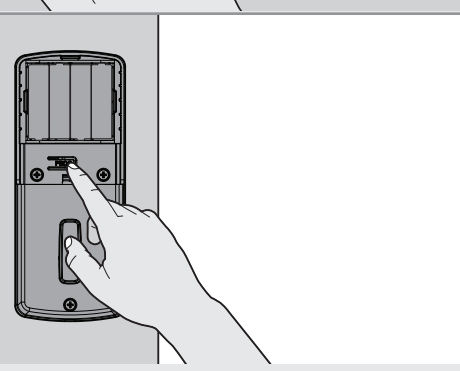

D Press **PROG**. You will hear 1 long beep. If not, repeat the process from step A.

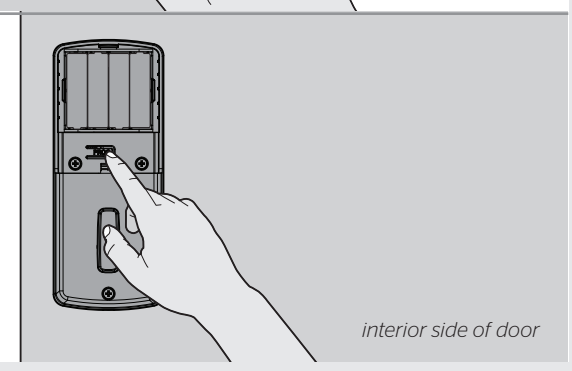

6 Add a User Code and Test Your Lock

A Add a User Code.

1. Press **PROG**
2. You will hear 2 long beeps
3. Press 12
4. Press **PROG**
5. You will hear 1 short beep
6. Enter a new 4-8 digit User Code
7. Press **PROG**
8. You will hear 1 long beep if successful. If you hear 3 beeps, it was unsuccessful. Repeat from step 1 slowly.

B Press the 🔒 button. The latch will extend to lock.

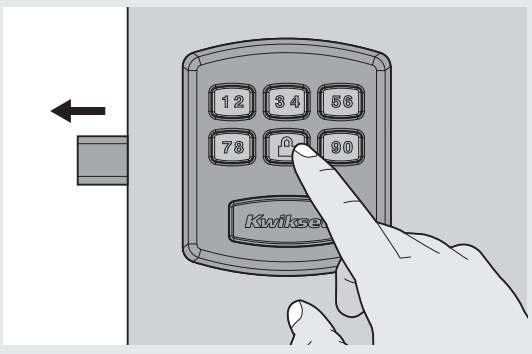

C Enter your User Code and press the 🔒 button. The latch will retract to unlock.

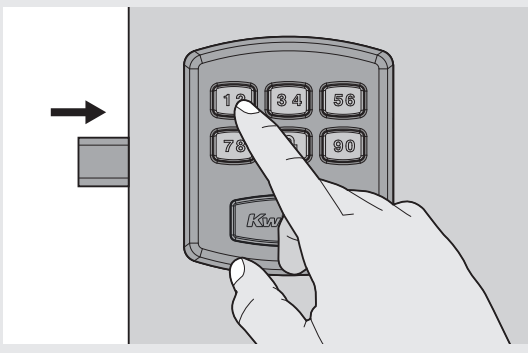

7 Reinstall battery cover

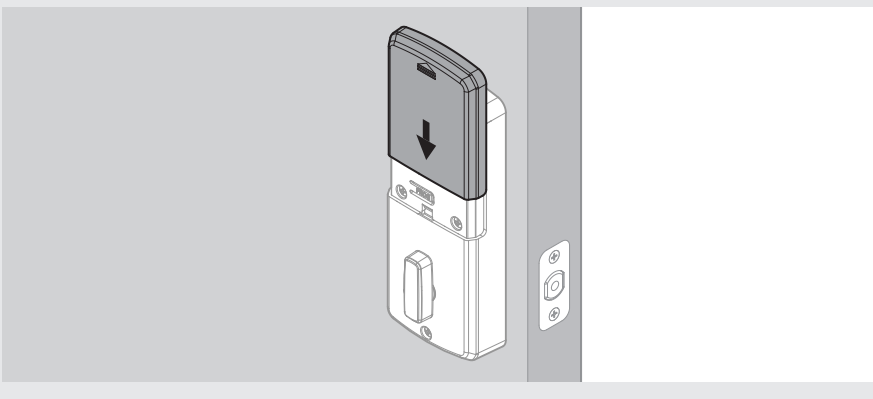

Programming

IMPORTANT: Before any programming sequence, make sure that your door is open and unlocked.

Note: If the lock is in silent mode, you will not hear the lock beeping.
Move swiftly during programming. If no digit is pressed for 10 seconds, the system will time out and you will need to restart the procedure.
If setting times out, you will hear 5 short beeps.

Adding New User Codes

1. Press **PROG**
2. You will hear 2 long beeps
3. Press 12
4. Press **PROG**
5. You will hear 1 short beep
6. Enter the new User Code
7. Press **PROG**
8. You will hear 1 beep if successful. If unsuccessful, you will hear 3 short beeps. Repeat from step 1 slowly.

Deleting a User Code

1. Press **PROG**
2. You will hear 2 long beeps
3. Press 34
4. Press **PROG**
5. You will hear 1 short beep
6. Enter the User Code you wish to delete
7. Press **PROG**
8. You will hear 1 beep if successful. If unsuccessful, you will hear 3 short beeps. Repeat from step 1 slowly.

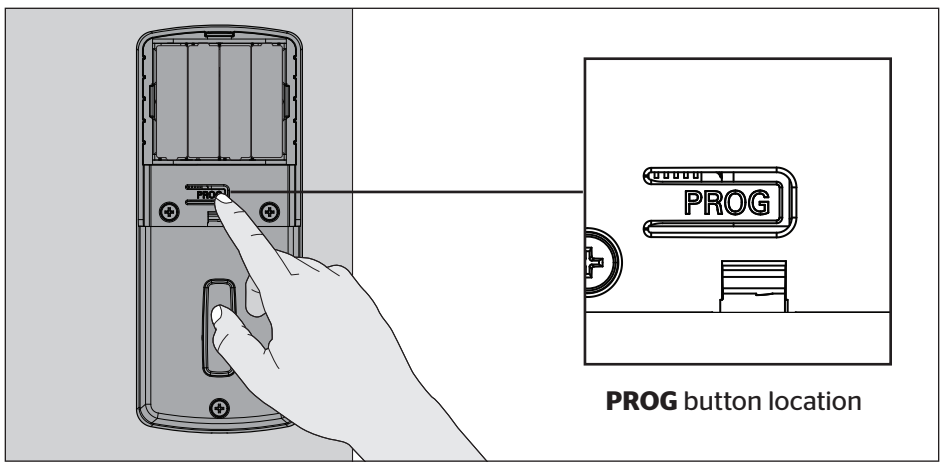

PROG button location

How to Set Up Silent Mode

Note: *Beeper is still active for "low battery" alarms.*

1. Press **PROG**
2. You will hear 2 long beeps
3. Press 78
4. Press **PROG**
5. You will hear 1 beep if successful. If unsuccessful, you will hear 3 short beeps. Repeat from step 1 slowly.

How to Reset the Lock

1. Make sure the door is open and unlocked.
2. Press **PROG** -(for 30 seconds). You will hear 1 long beep.
3. Release **PROG** button
4. Press **PROG** again.
5. You will hear 3 long beeps

Note: To use the lock, you will have to go through the door handing process and add User Codes.

System Alerts

Alert	Reason
1 Short beep	Lock/Unlock movement successful
1 Long beep	Programming successful
2 Long beeps	Enter Programming mode
3 Short beeps	User code is not yet set
	Setting unsuccessful
	Wrong user code
	Lockout mode
4 Long Beeps	Handing is not yet set
5 Short Beeps	Time out for programming mode
10 Long beeps	Low battery alarm
15 Short beeps	3 consecutive incorrect entries

! Low Battery

If the 4 AA batteries are too low to operate the lock, use a 9-Volt Alkaline battery to temporarily power the lock.

Make sure both terminals on the 9-Volt battery touch the terminals below the keypad. When lock has enough power you will hear 3 short beeps. **Hold** the 9-Volt in place while entering your user code to unlock the door. Continue holding the 9-Volt in position until the door unlocks.

Note: If you remove the battery before the door unlocks, you will need to re-enter your user code

A Remove the terminal cover.

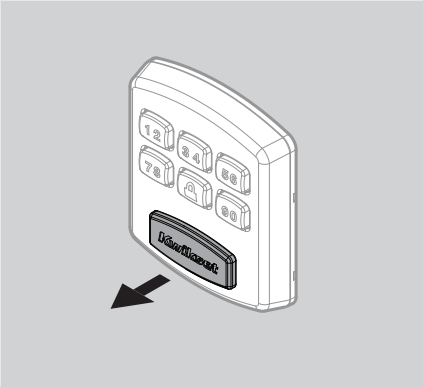

B **Hold** the battery to the terminals. You will hear beeping to signal you can open door.

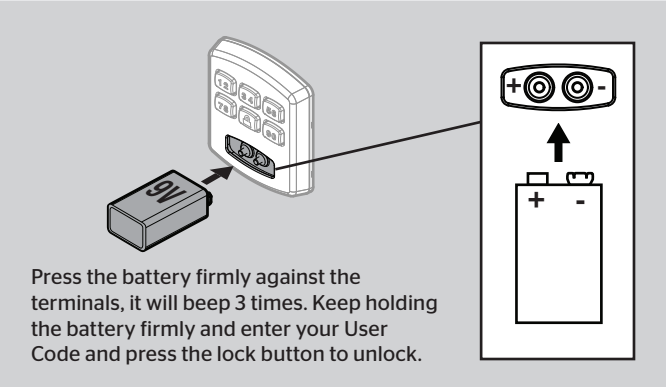

Press the battery firmly against the terminals, it will beep 3 times. Keep holding the battery firmly and enter your User Code and press the lock button to unlock.

C Replace the terminal cover.

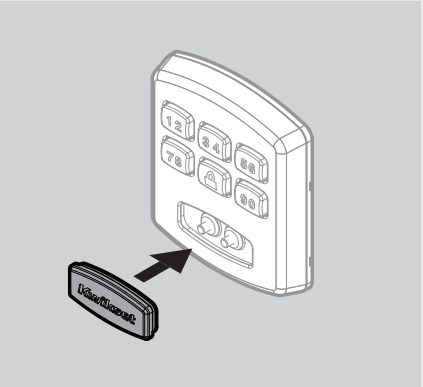

Regulatory Compliance

This product complies with standards established by the following regulatory bodies:

- Federal Communications Commission (FCC)
- Industry Canada

FCC

This device complies with Part 15 of the FCC Rules. Operation is subject to the following two conditions:
(1) this device may not cause harmful interference, and
(2) this device must accept any interference received, including interference that may cause undesired operation.

This equipment has been tested and found to comply with the limits for a Class B digital device, pursuant to Part 15 of the FCC Rules. These limits are designed to provide reasonable protection against harmful interference in a residential installation. This equipment generates, uses, and can radiate radio frequency energy and, if not installed and used in accordance with the instructions, may cause harmful interference to radio communications. However, there is no guarantee that interference will not occur in a particular installation. If this equipment does cause harmful interference to radio or television reception, which can be determined by turning the equipment off and on, the user is encouraged to try to correct the interference by one or more of the following measures:

- Reorient or relocate the receiving antenna.
- Increase the separation between the equipment and receiver.
- Connect the equipment into an outlet on a circuit different from that to which the receiver is connected.
- Consult the dealer or an experienced radio/TV technician for help.

IMPORTANT! Changes or modifications not expressly approved by the manufacturer could void the user's authority to operate the equipment.

Industry Canada

This device complies with Industry Canada licence-exempt RSS standard(s). Operation is subject to the following two conditions: (1) this device may not cause interference, and (2) this device must accept any interference, including interference that may cause undesired operation of the device.

Troubleshooting

Problem	Possible Cause	Actions
The lock doesn't respond and the keypad doesn't respond when touched (no beeping is heard).	1. Cables are NOT properly connected. 2. Batteries are drained.	1. Make sure cables are connected properly. 2. Install a fresh set of batteries.
The lock beeps 4 Long Beeps when the keypad is touched but it cannot be locked/unlocked	Door handing has not yet been set.	Follow the instructions for left or right door handing.
Door handing is set but the lock beeps 3 Long Beeps.	User code has not yet been set.	Make sure the lock is programmed with at least one User Code. Follow the instructions for setting up a User Code.
Door handing and user codes are set and the motor is activated but the lock cannot be locked or unlocked (or the latch runs in the opposite direction).	Incorrect door handing direction	Re-do the door handing instructions.
When the door is closed and the lock/unlock button is pressed to lock/unlock the door, the motor runs, but the latch doesn't extend/retract.	1. The hole in the door frame behind the strike is NOT drilled at least 1 in (25 mm) deep. 2. The strike plate is NOT aligned with the latch bolt.	1. Make sure the hole in the door frame behind the strike is drilled at least 1 in (25mm) deep. 2. Make sure the strike plate is aligned with the latch bolt. If needed, reposition the strike.
When the batteries are drained and a 9V battery is connected to the terminals but the lock doesn't respond.	1. The 9V battery is NOT connected correctly. 2. The 9V battery is drained.	1. Flip the 9V battery and try again. 2. Try a new 9V battery.
Door unlocks with lock button and unlocks with user code.	There was an error during door handing.	Step 5 needs to be repeated. Choose 12 if the latch is left of the keypad. Choose 56 if the latch is right of the keypad.

Important Safeguards

1. Read all instructions in their entirety.
2. Familiarize yourself with all warning and caution statements.
3. Remind all family members of safety precautions.
4. Restrict access to your lock's interior assembly and routinely check your settings to ensure they have not been altered without your knowledge.
5. Protect your User Codes.
6. Dispose of used batteries according to local laws and regulations.

⚠ **CAUTION:** Prevent unauthorized entry. Since anyone with access to the interior assembly can reset the lock and change the User Codes, you must restrict access to the interior assembly and routinely check the User Codes to ensure they have not been altered without your knowledge.

⚠ **WARNING**: This Manufacturer advises that no lock can provide complete security by itself. This lock may be defeated by forcible or technical means, or evaded by entry elsewhere on the property. No lock can substitute for caution, awareness of your environment, and common sense. Builder's hardware is available in multiple performance grades to suit the application. In order to enhance security and reduce risk, you should consult a qualified locksmith or other security professional.

© 2018 Spectrum Brands, Inc.