66856
Rev 01

Kwikset

English

HALO™ TOUCH

FINGERPRINT SMART LOCK

Quick Start and Troubleshooting Guide

Welcome to the Kwikset family!

This guide will get you up and running with your new **Halo Touch Fingerprint Smart Lock**.

If you have any issues, please visit our support center: **kwikset.com/halo-touch** or call us at **1-800-327-5625**.

Getting started

For an interactive version of this installation guide, please download the **Kwikset app**:

kwikset.com/app

Download on the App Store

GET IT ON Google Play

Kwikset

Table of contents

Parts in the box 4

Required tools 5

Installation.....7

Download the app.....17

Reference guide 19

Frequently Asked Questions 33

Parts in the box

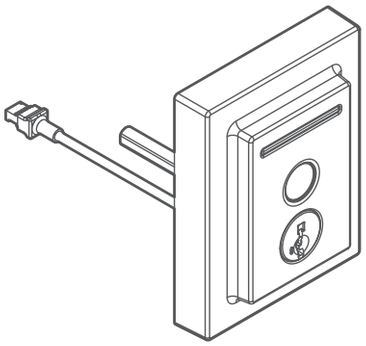

Exterior assembly

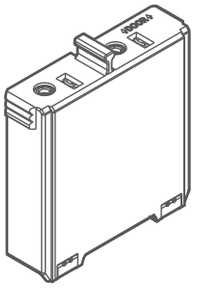

Battery pack

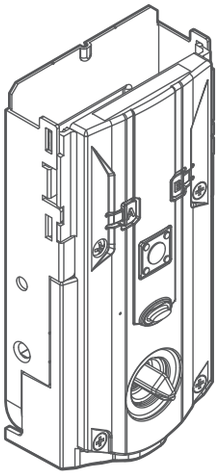

Interior assembly

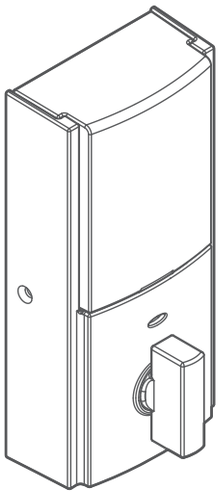

Interior cover

Step 1

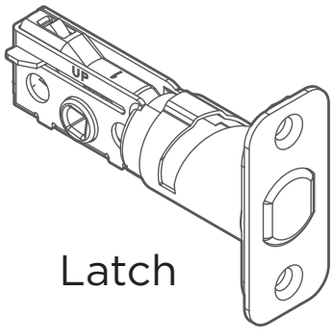

Latch

03809 *actual size*

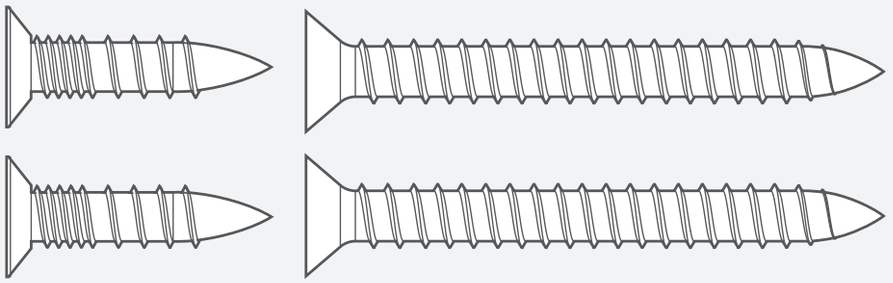

Step 2

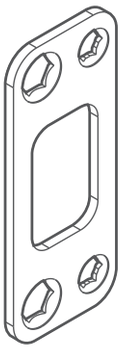

Strike

46780 *actual size*

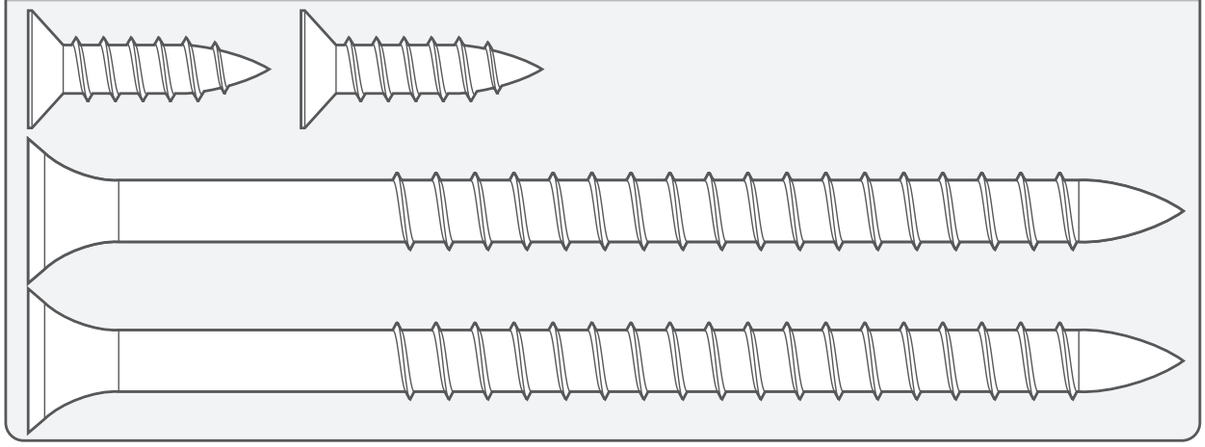

Step 3

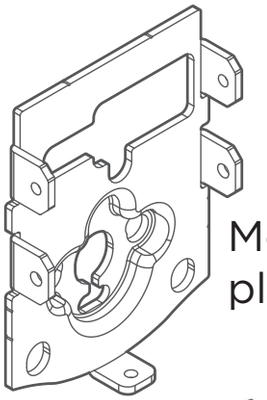

Mounting plate

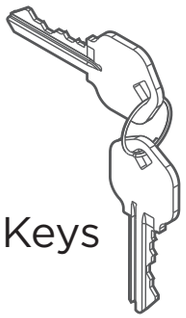

Keys

64844 *actual size*

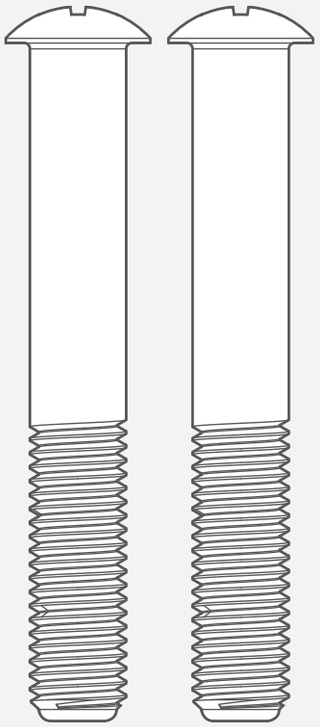

Step 4

49191 *actual size*

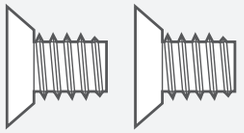

Step 5

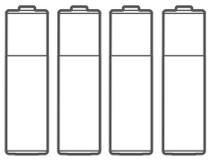

Batteries

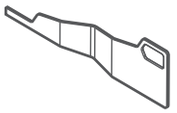

SmartKey™ tool

68611 *actual size*

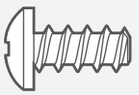

64109 *actual size*

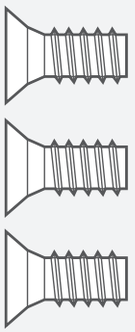

Required tools

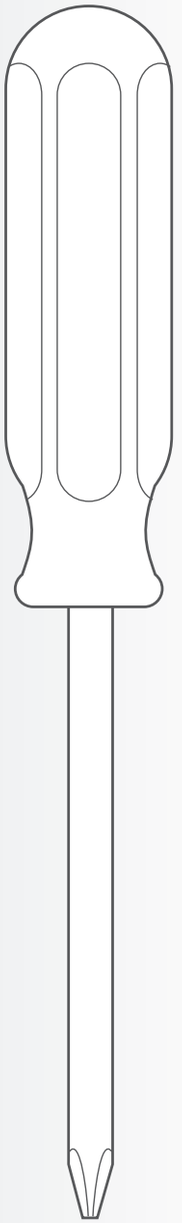

Phillips head screwdriver

⚠ No electric drills

Installation

! Remove your existing deadbolt

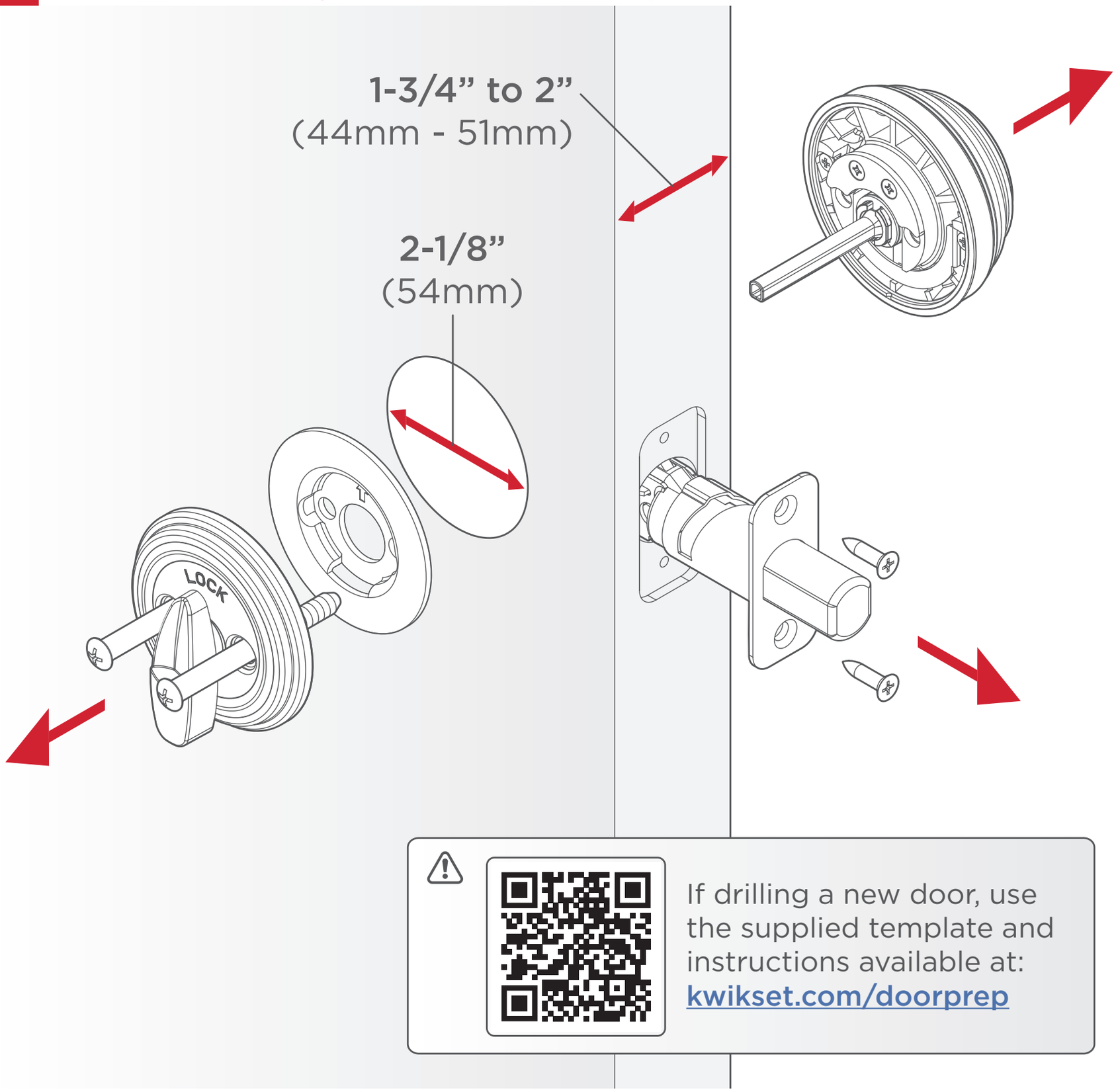

If drilling a new door, use the supplied template and instructions available at: kwikset.com/doorprep

1 Install the latch

A Extend the latch bolt.

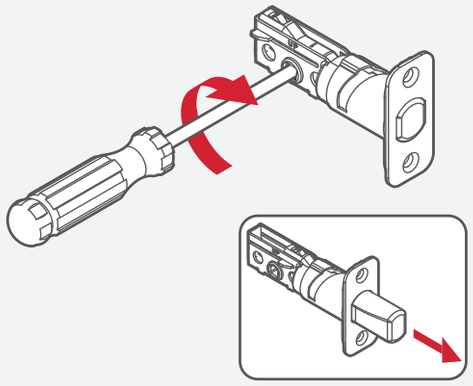

B **UP** is on top.

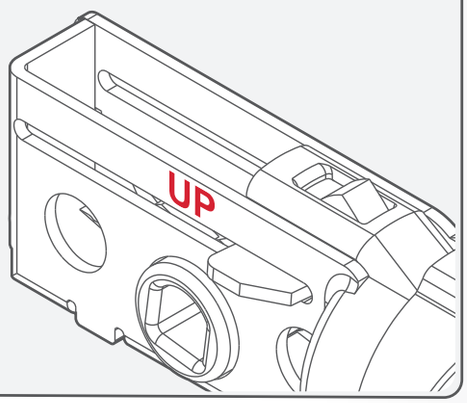

C If the D-shaped hole is not centered in the door hole, rotate the latch face to extend the latch.

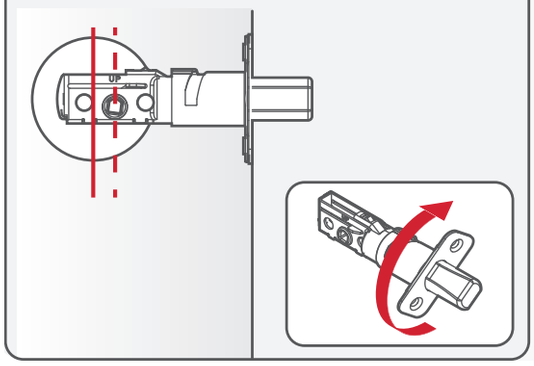

⚠ If your door requires a drive-in latch, please contact Kwikset at **1-800-327-5625.**

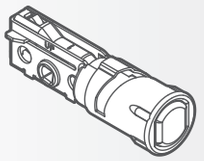

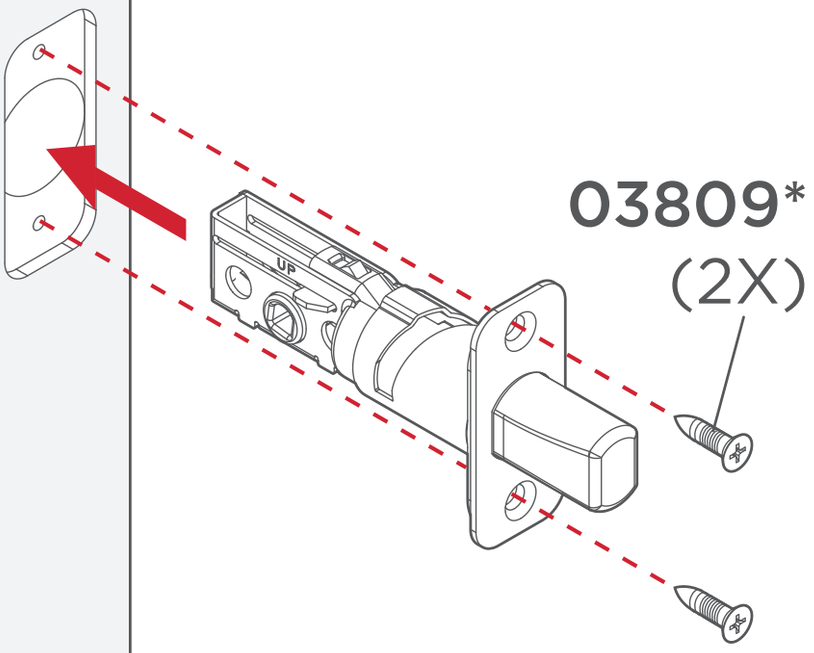

*Use the longer screws if the holes are worn out.

You will have two extra screws.

[OUTSIDE]

2 Install the strike

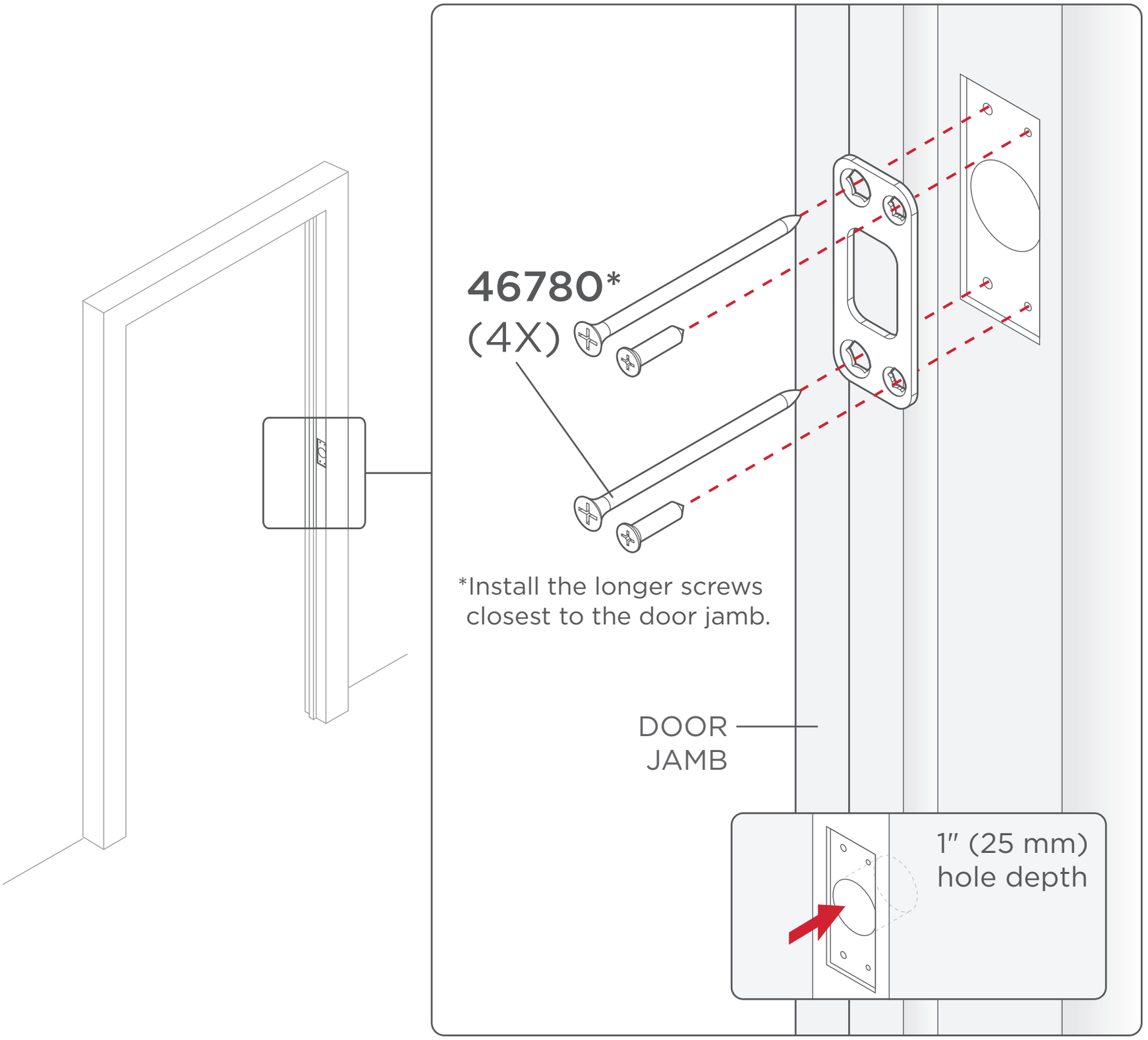

3 Install the exterior assembly

[OUTSIDE]

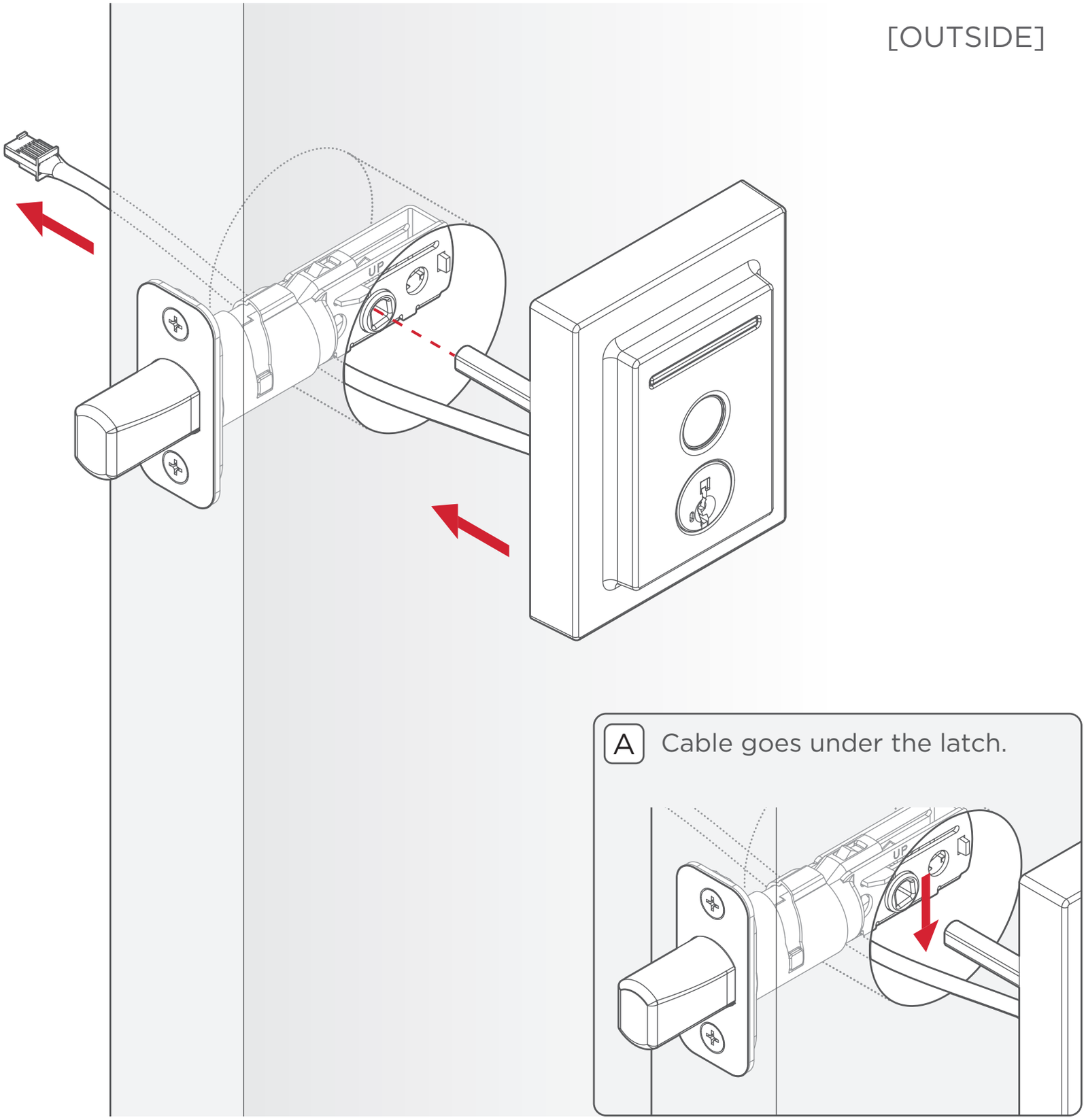

[INSIDE]

Keep parallel to the door edge

Tighten the screws evenly.
DO NOT over-tighten.

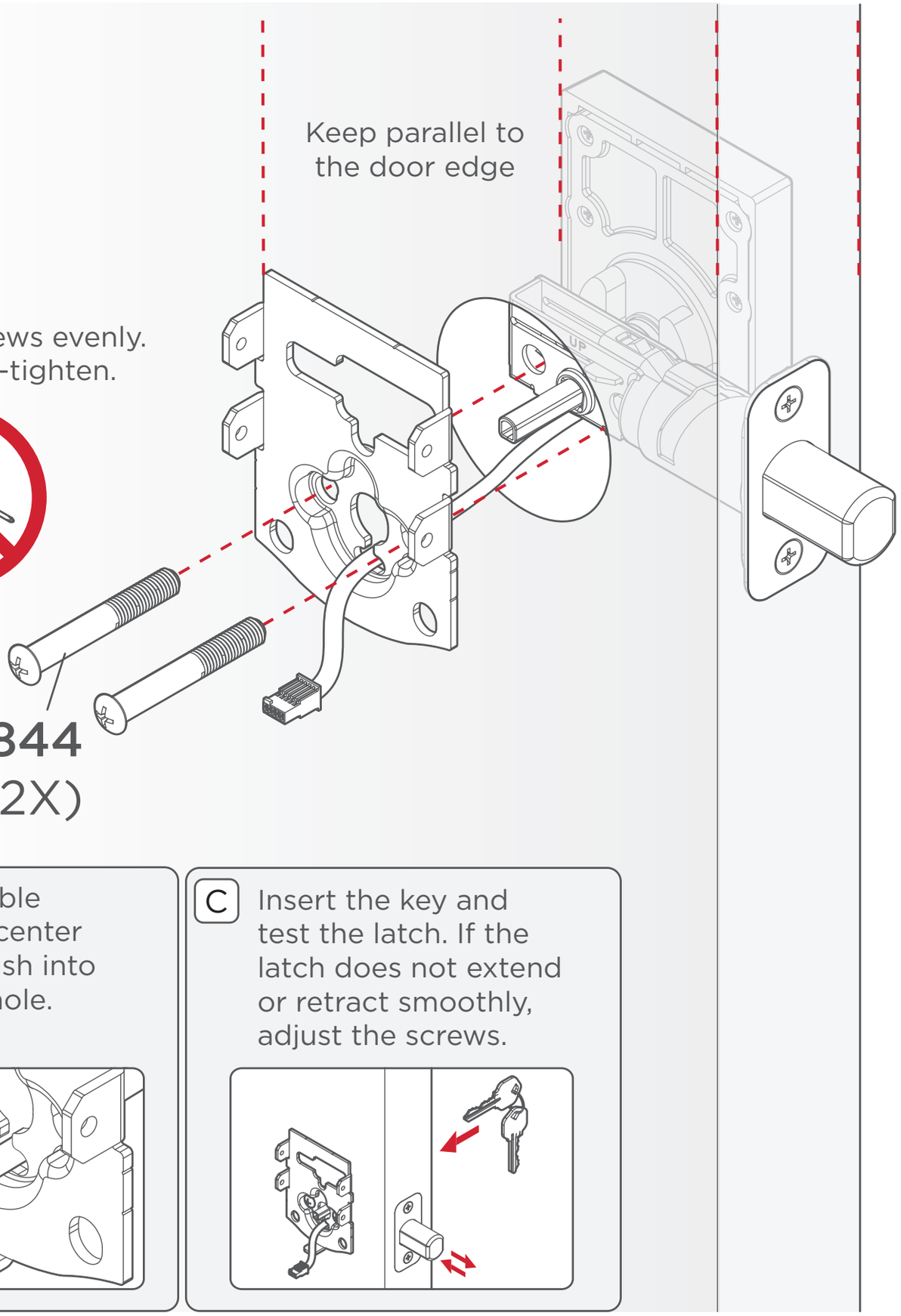

B Route the cable through the center hole, then push into the bottom hole.

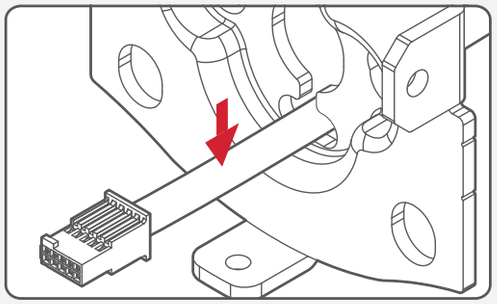

C Insert the key and test the latch. If the latch does not extend or retract smoothly, adjust the screws.

4 Install the interior assembly

A Make sure the turnpiece shaft is pointing up as shown below.

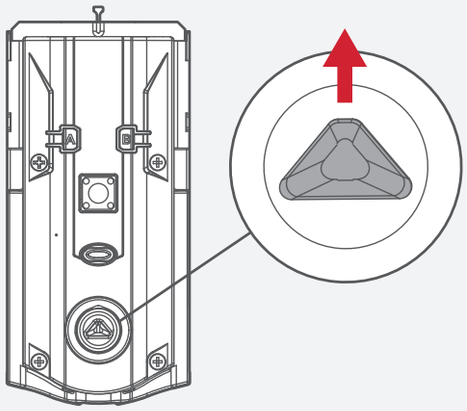

Incorrect:

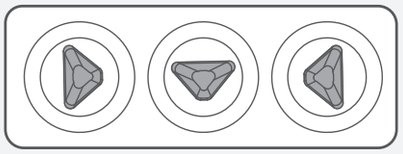

B If the turnpiece shaft is not pointing up, put the cover back on and rotate the turnpiece until you hear a click.

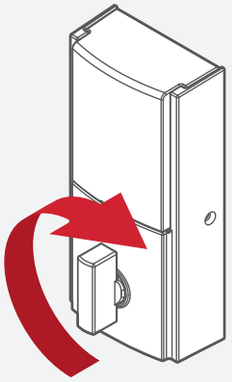

Remove the interior cover from the interior assembly.

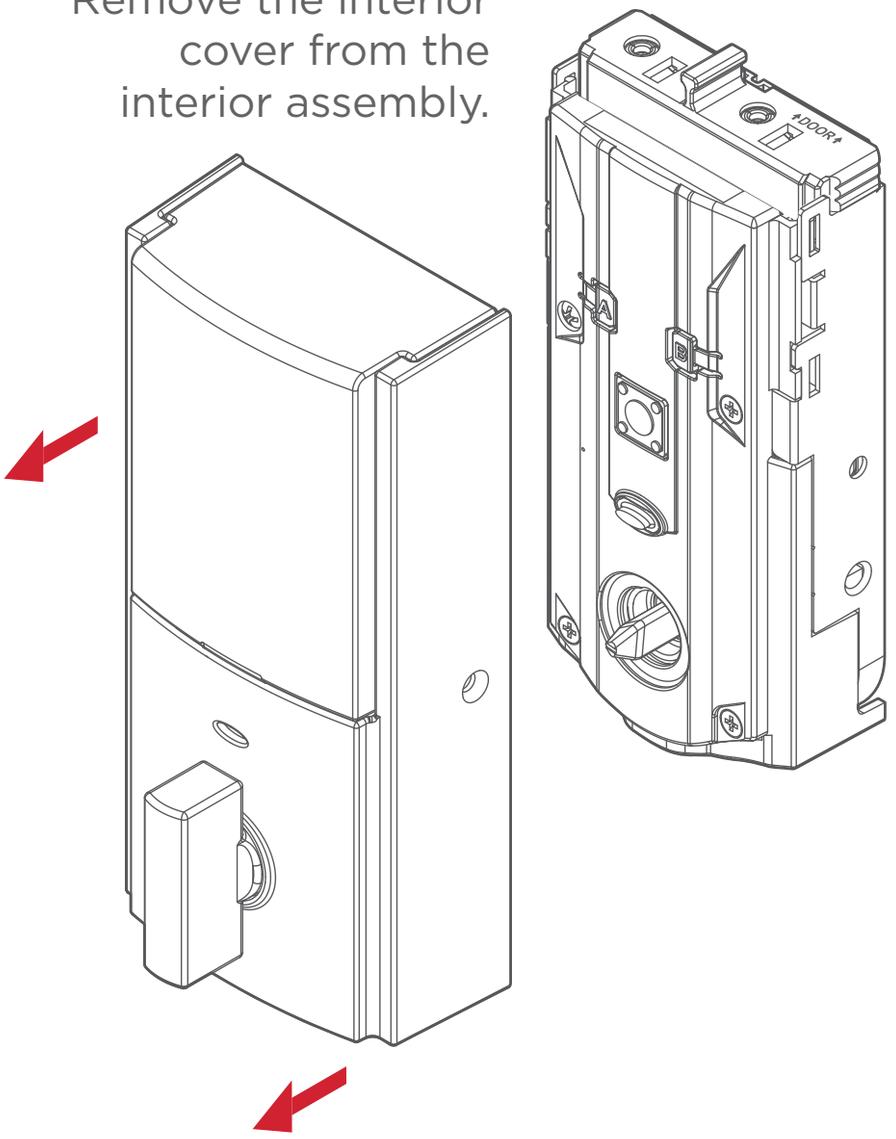

Secure the interior assembly onto the mounting plate.

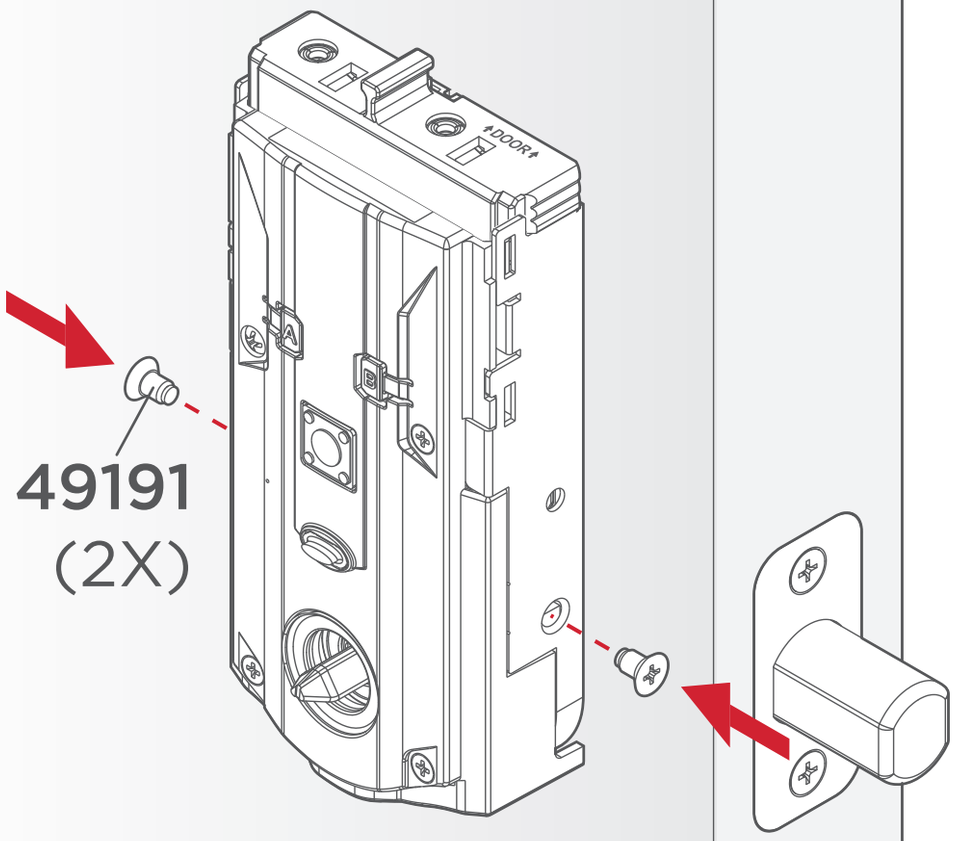

49191
(2X)

[INSIDE]

C Connect the cable. Ensure a tight cable connection.

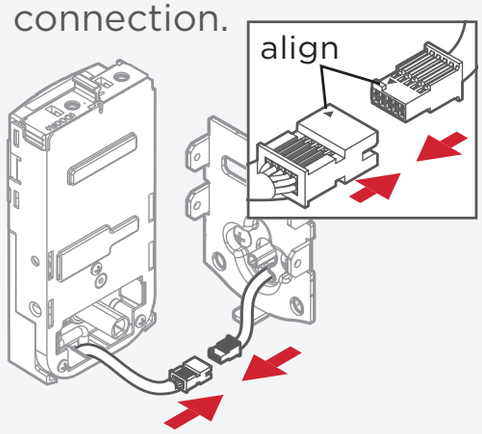

D Lay cable flat inside the bottom of the interior housing.

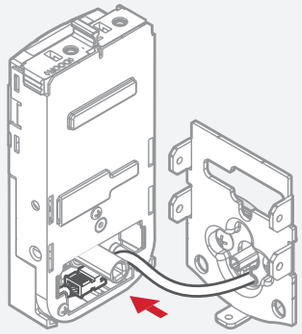

E Ensure the spindle fully engages with the turnpiece shaft.

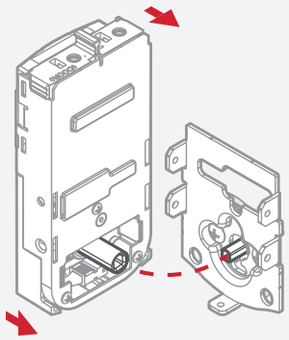

5 Perform the door handing process

Install 4 AA batteries into the battery pack.

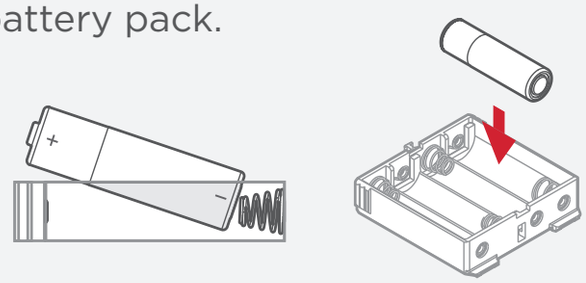

The latch will retract and extend to learn the orientation of the door. Then the status LED will indicate success or failure.

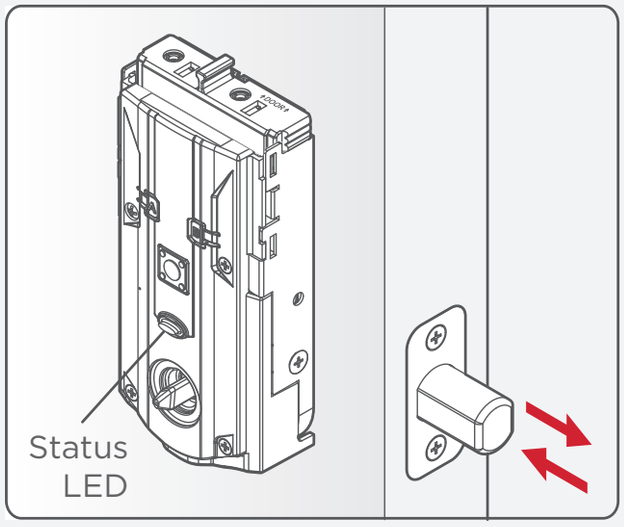

GREEN: Successful. Proceed to the next step.

RED: Unsuccessful. Make sure the lock interior and batteries are correctly installed. Perform step 5 again. If your second attempt is still unsuccessful, follow the Manual Door Handing instructions.

With the door open, install the battery pack to initiate auto-handing. **NOTE: Lock must be installed on the door before installing the battery.**

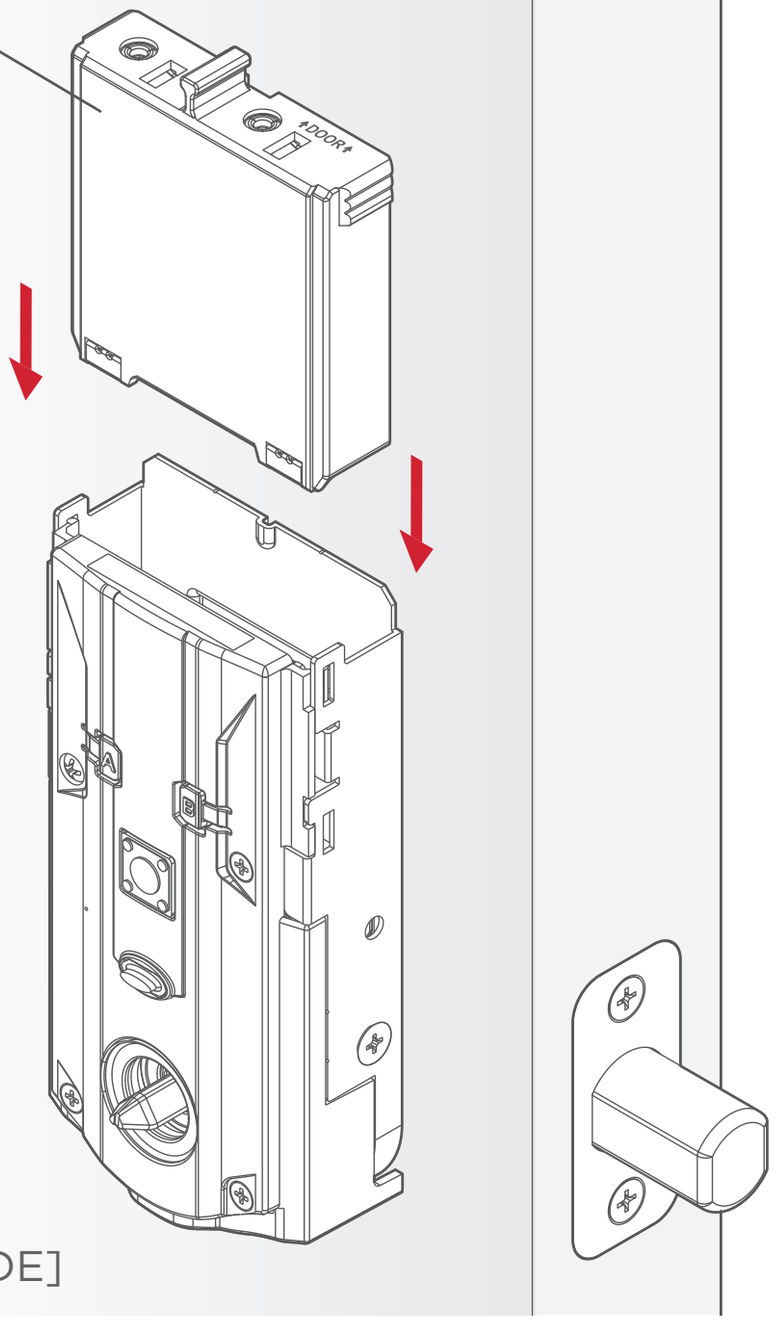

Secure the interior cover onto the interior assembly.

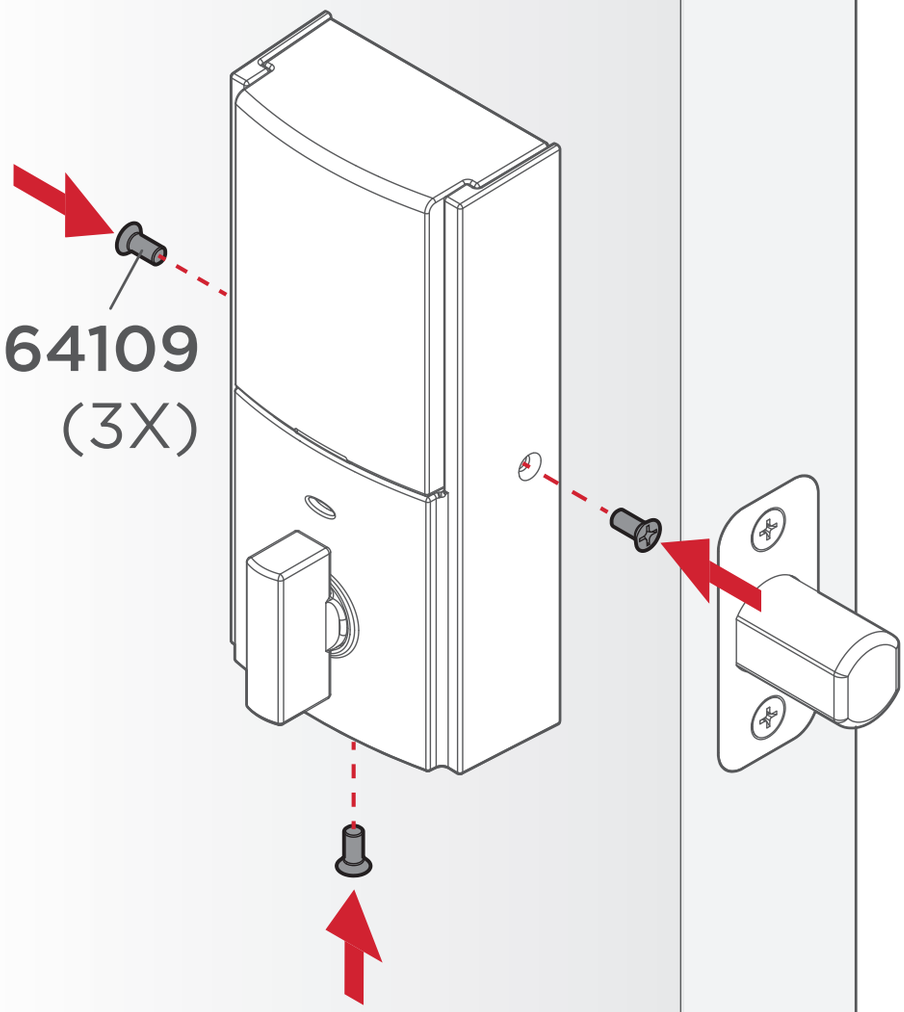

[INSIDE]

You may need to rotate the turnpiece to align with the turnpiece shaft.

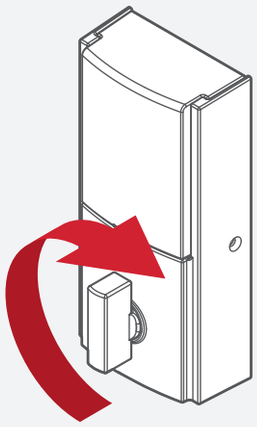

For additional security, you may choose to lock the window by installing the security screw.

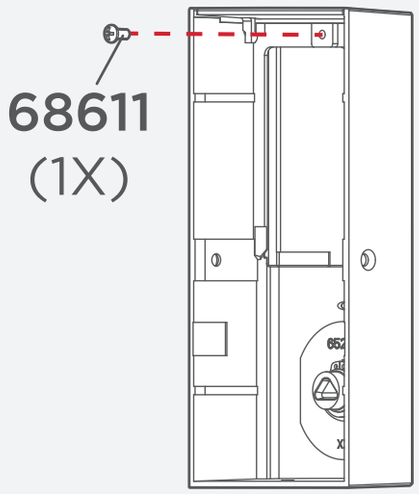

When the window is locked, you will need to remove the entire cover to access the battery pack and buttons.

Download the app
& create an account

Create your account

Follow the setup instructions in the **Kwikset app** to create your account:

kwikset.com/app

Download on the App Store

GET IT ON Google Play

⚠ The Kwikset app is needed to use this lock. If this lock was professionally installed (or installed by someone other than the homeowner), make sure this step is performed by the homeowner.

Reference Guide

Locking

To lock your door, place **any finger** on the fingerprint sensor. The light bar will display the following animations, beep once, and the door will lock.

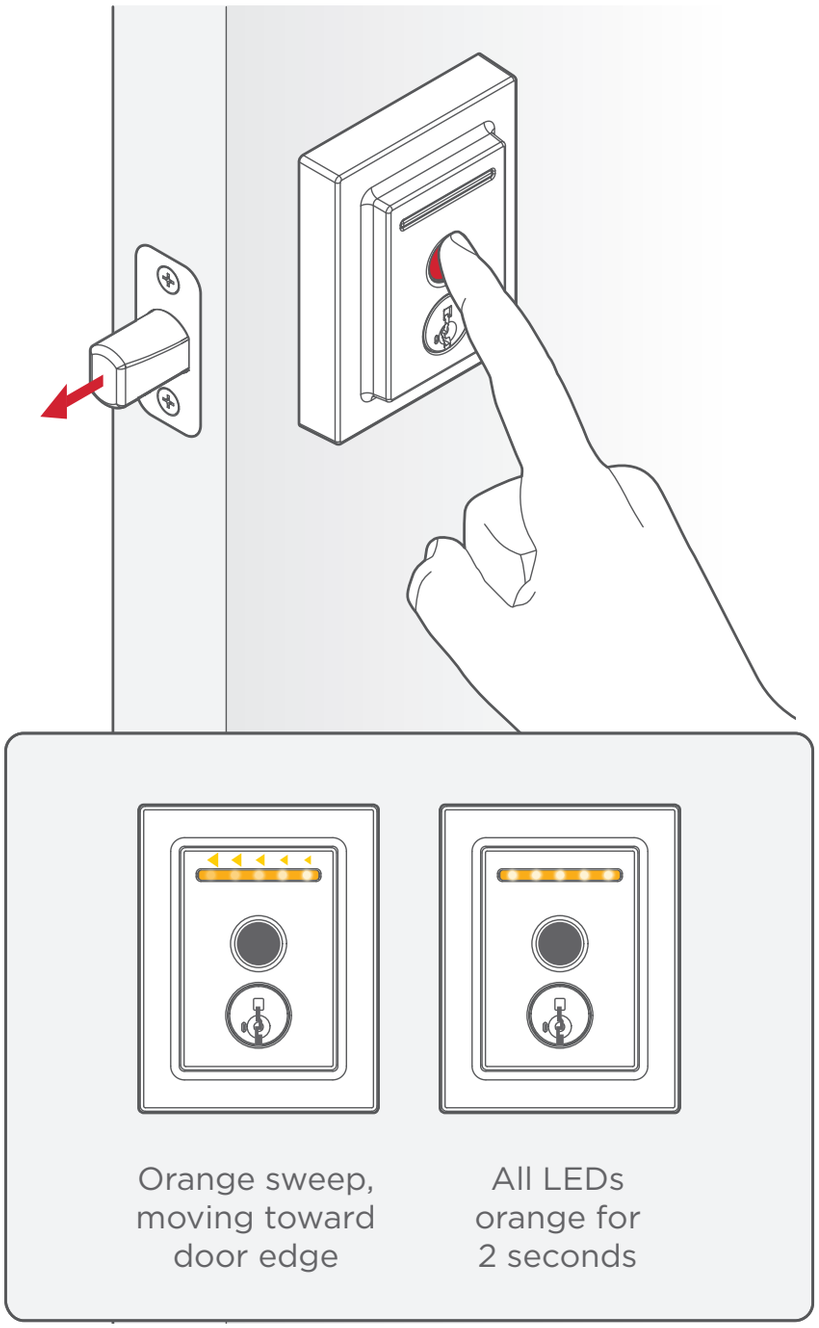

Unlocking

To unlock your door, place your **enrolled finger** on the fingerprint sensor. The light bar will display the following animations, beep once, and the door will unlock.

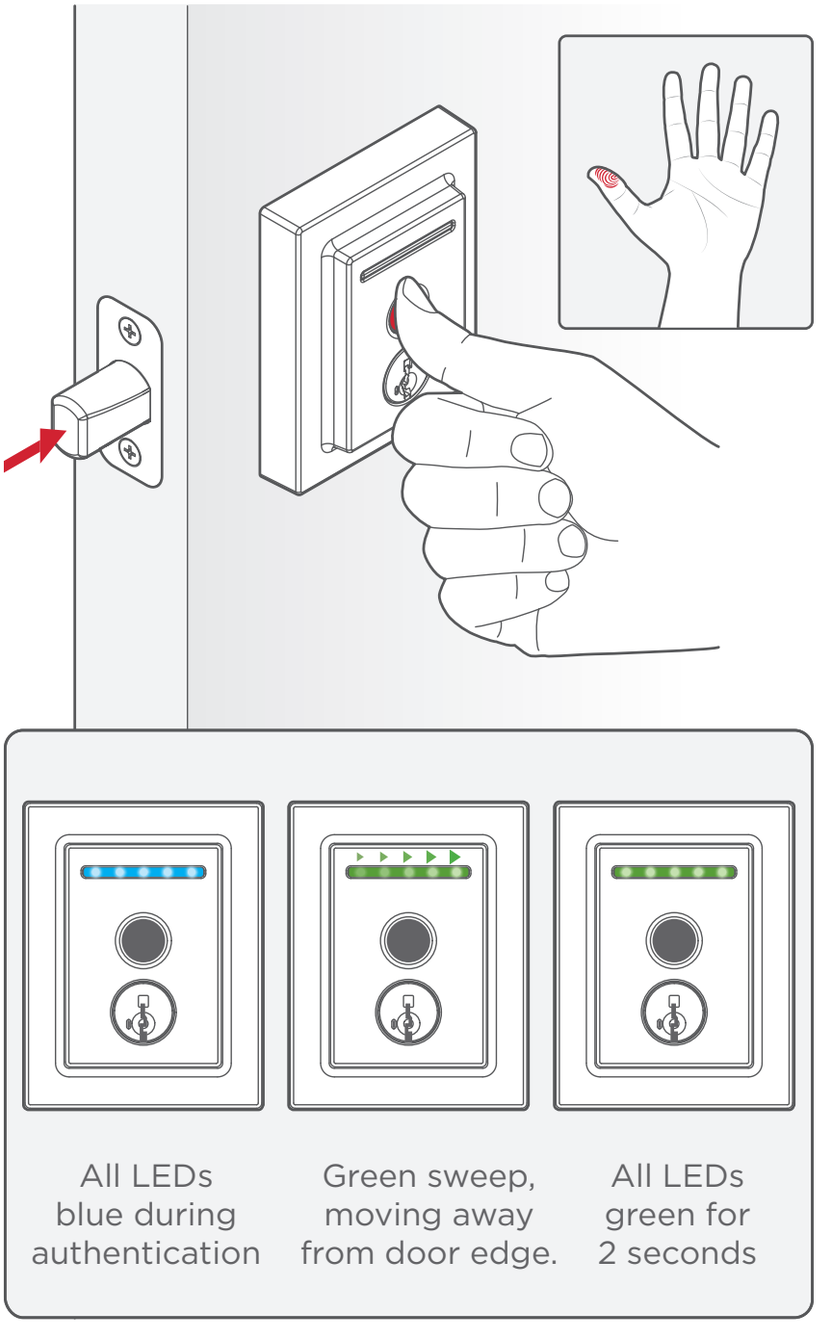

Enabling Amazon Alexa

Follow the setup instructions to enable Amazon Alexa:

Amazon Alexa Guide

Enabling Google Assistant

Follow the setup instructions to enable Google Assistant:

Google Assistant Guide

SmartKey Re-key

Re-key the lock to work with your existing key by following the **SmartKey Re-key instructions**.

NOTE: If Auto-Lock is enabled, remove the battery pack before re-keying your lock. Complete the following steps:

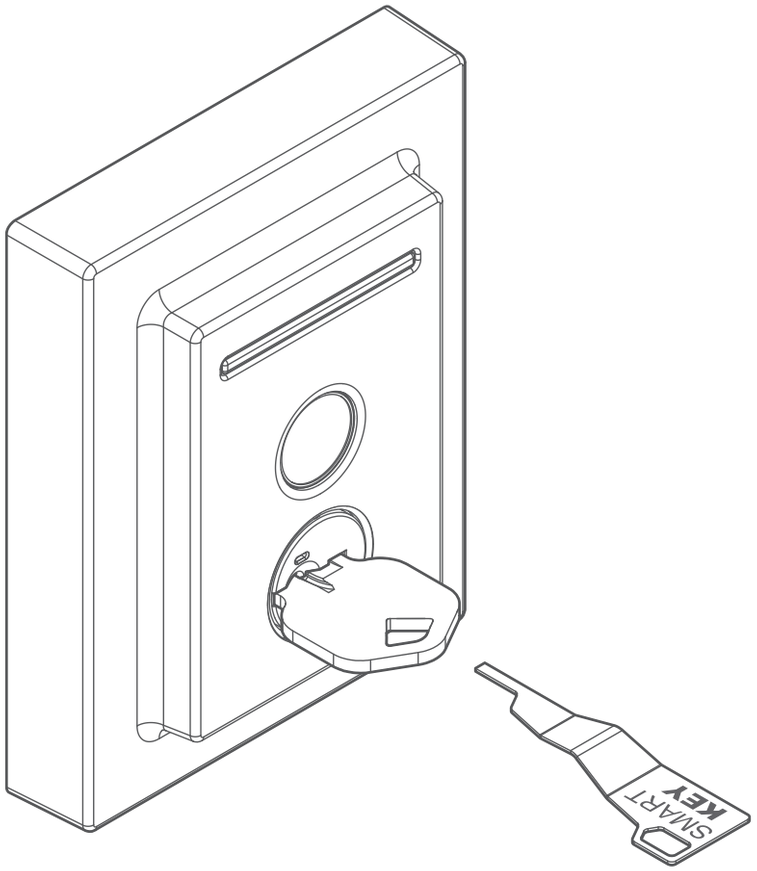

Exterior LED Indicators

Orange:
Locking

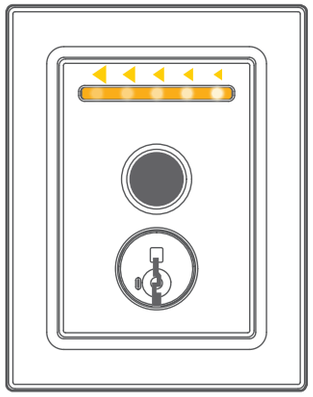

Green:
Unlocking

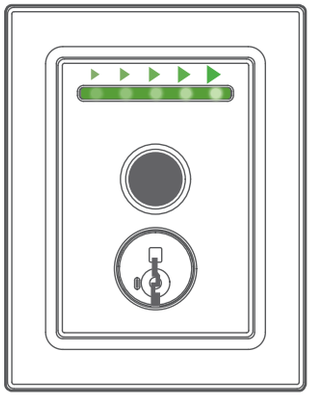

Blue:
Authenticating fingerprint

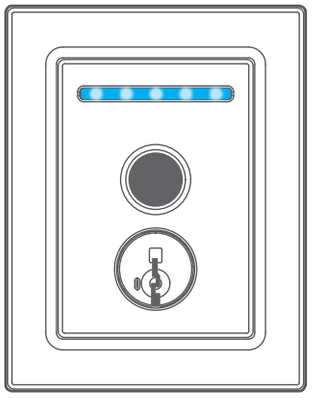

Red:
Low battery or door jam

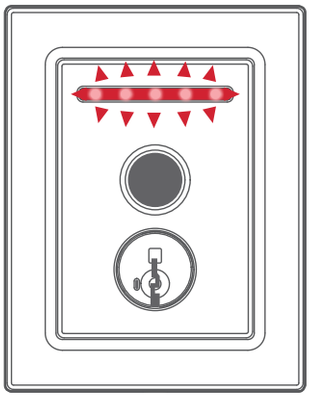

Interior LED Indicators

Green

Solid:

Action successful

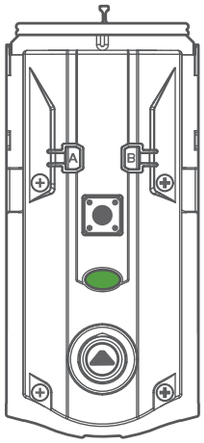

Blinking:

Unlocked

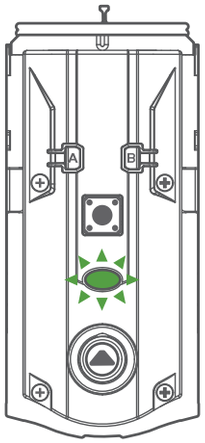

Red

Solid:

Door handing unsuccessful

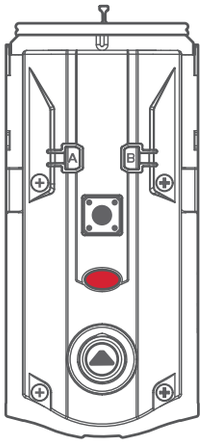

Blinking:

Low battery or action unsuccessful

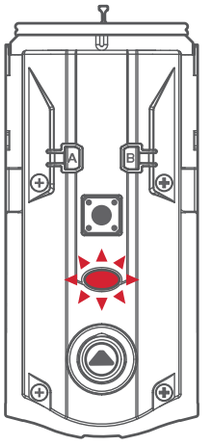

Blue

Solid:

Bluetooth pairing successful

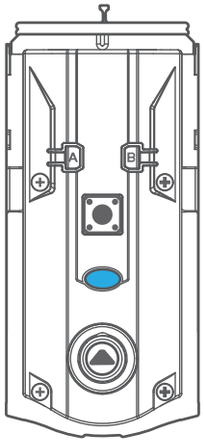

Blinking:

Bluetooth pairing mode

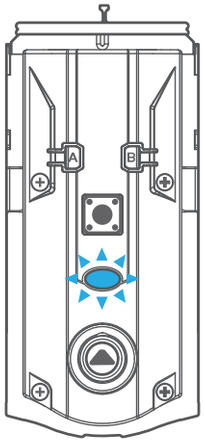

Orange

Solid:

Entering network reset mode

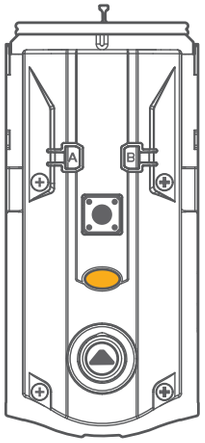

Blinking:

Locked or network/ system mode

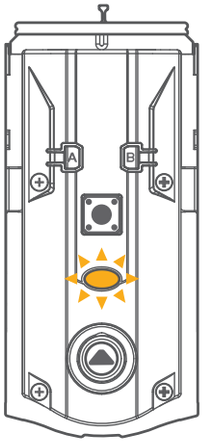

Manual Door Handing

If needed, the door handing process can be initiated manually. This is useful if the lock is being moved to a different door.

1. Remove battery pack.

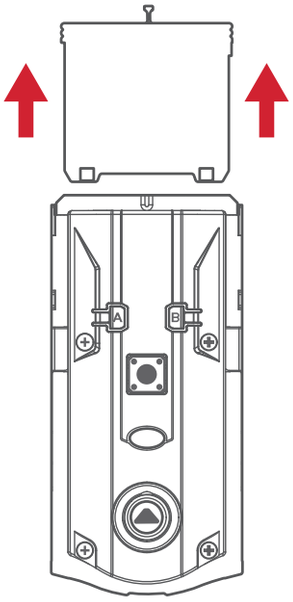

2. Press and HOLD the Program button while reinserting the battery pack. Release the Program button after 3 seconds. The status LED will flash red and green.

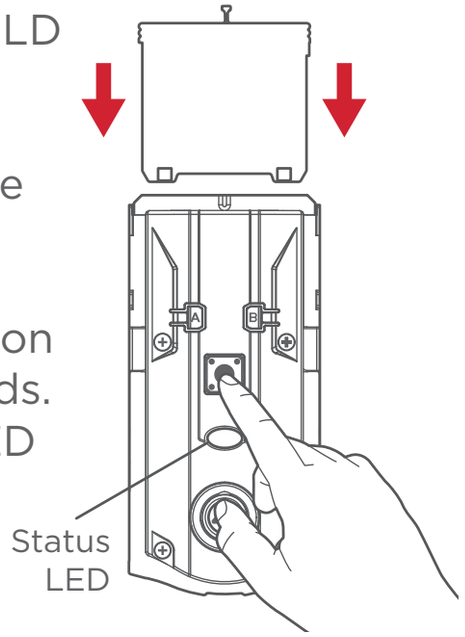

3. Press the Program button once more.

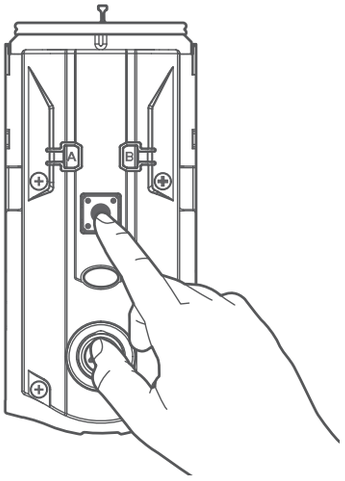

4. The latch bolt will extend and retract to learn the orientation of the door. The LED will flash green if handing is successful or red if handing is unsuccessful.

Network Reset

Network Reset will delete all Wi-Fi settings, Bluetooth pairings, user associations, and remove the lock from the account.

1. Press and HOLD “A” for 10 seconds. You will hear 1 short beep and see an amber LED

   Note: After 3 seconds, you will hear 1 short beep and see a blue LED. You should continue to hold “A” to enter network reset mode.

2. Release “A.” You will see a blinking amber LED to indicate it is in network reset mode.

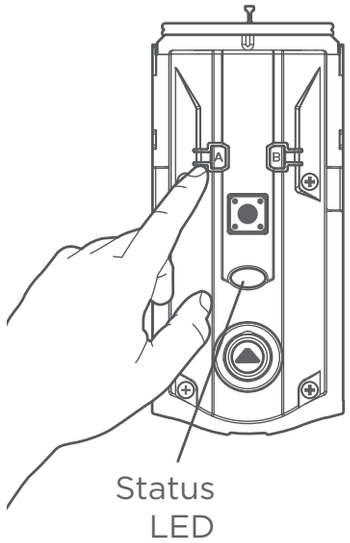

3. Press and release the Program button to confirm network reset.

   The Program button must be pressed within 10 seconds of releasing “A” or the function will time out.

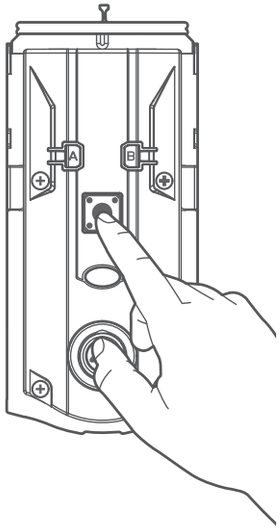

4. If successful, you will hear 1 long beep and see a green LED. If unsuccessful, you will hear 5 rapid beeps and see a blinking red LED. If unsuccessful, repeat from step 1.

Successful:

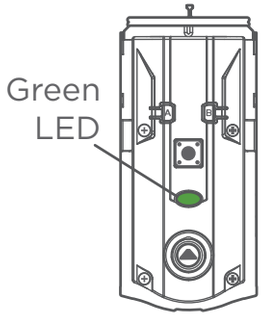

Unsuccessful:

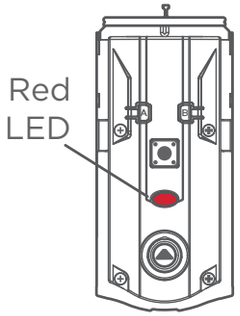

System Reset

System Reset will delete all users, fingerprints, and lock settings including lock handing.

1. Press “A” 10 times. You will hear 1 short beep and see a blinking amber LED to indicate it is in system reset mode.

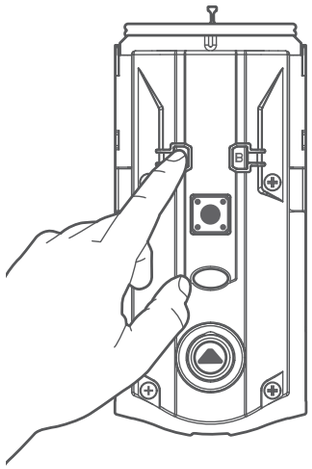

2. Press and release the Program button to confirm system reset.

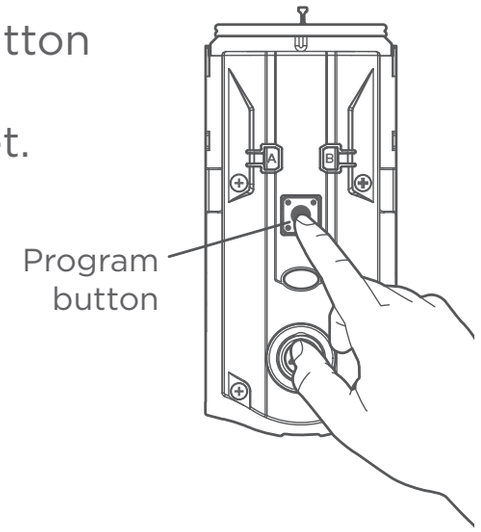

3. If successful, you will hear 1 long beep and see a green LED, and the reset process will begin. During the reset process, the LED will blink green/red a few times and will beep when complete.

   If unsuccessful, you will hear 5 rapid beeps and see a blinking red LED. If unsuccessful, repeat from step 1.

Successful:

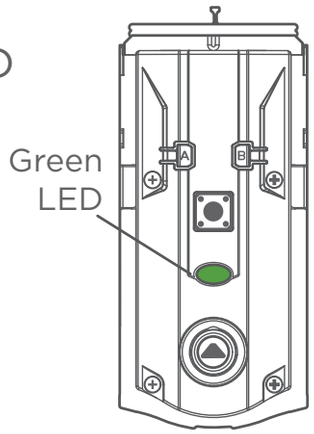

Unsuccessful:

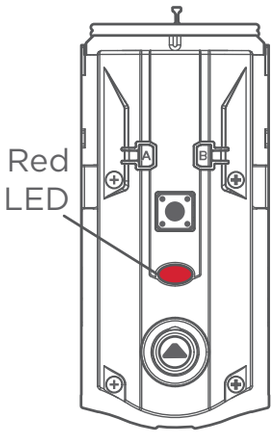

Factory Reset

Factory Reset will delete all Wi-Fi/Bluetooth pairings, users, remove the lock from the account, and reset all lock settings.

1. Remove battery pack.

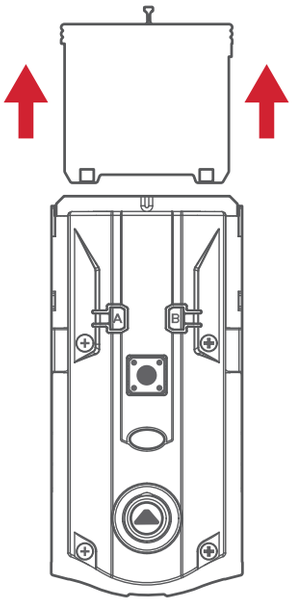

2. Press and HOLD the Program button while reinserting the battery pack.

   Keep holding the button for 30 seconds until the lock beeps and the status LED flashes red.

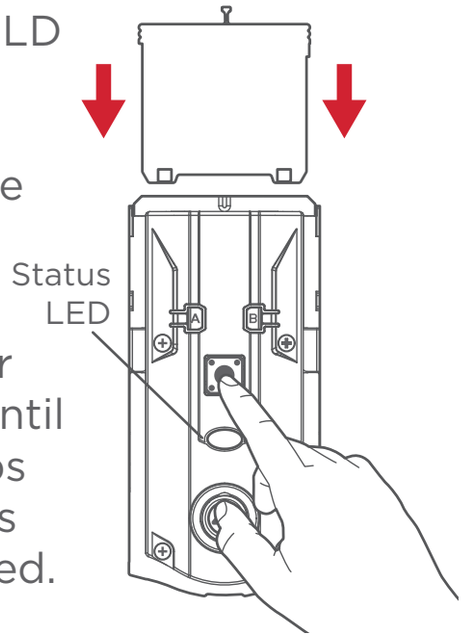

3. Press the Program button once more. The LED will flash green and red, and the auto-handing process will begin.

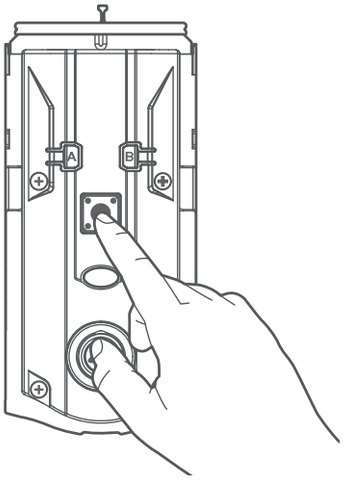

4. The latch will retract and extend to learn the orientation of the door. The LED will flash green if auto-handing is successful or red if auto-handing is unsuccessful.

Device Compatibility

iOS 12 and higher

- Apple iPhone 6
- Apple iPhone 6S
- Apple iPhone 7
- Apple iPhone 7S
- Apple iPhone 7 Plus
- Apple iPhone 8
- Apple iPhone 8 Plus
- Apple iPhone X
- Apple iPhone XR
- Apple iPhone XS
- Apple iPhone XS
- Apple iPhone XS Max
- Apple iPhone 11
- Apple iPhone 11 Pro
- Apple iPhone 11 Pro Max
- Apple iPad Air 2
- Apple iPad Pro

Android 8.0 and higher

- LG G7 ThinQ
- Google Pixel 2XL
- Google Pixel 3
- Google Pixel 3a
- Google Pixel 3XL
- Samsung Galaxy S7
- Samsung Galaxy Edge S7
- Samsung Galaxy S8
- Samsung Galaxy S9
- Samsung Galaxy S9 plus
- Samsung M30, OnePlus 6
- Motorola Moto X
- Xiaomi Pocophone F1

Router Compatibility

- Router-TP Link (450 Mbps wireless N Router TL-WR940N)
- Linksys WRT32X Gaming Router
- NETGEAR Orbi Whole Home WIFI System Triband WIFI
- TP Link- AC1750
- Linksys EA6350 Wi-Fi Wireless Dual-Band+ Router with Gigabit & USB
- ASUS 3-In-1 Wireless Router (RT-N12)
- TP-LINK TL-WR702N
- Netgear R6700-100NAS Nighthawk AC1750 Smart Dual Band WiFi Router (R6700)
- Netgear WNR3500 v2
- Netgear WNR3500L
- Mi router 4 Dual Band 2.4 and 5GHZ
- D-Link DIR816 Dual Band 2.4 and 5GHZ
- NetGear WGR614V10
- D-Link DIR 600M- Cloud router
- D-Link N150
- D-Link N300
- Repeater- Mi Wifi repeater 2
- Repeater - Mi Repeater Pro 300M
- Repeater - TP link wifi repeater WA850RE

NOTE: Halo Touch implements a standard based Wi-Fi radio and should work with majority of the routers available in the market that are Wi-Fi certified.

Halo Touch at a Glance

Exterior

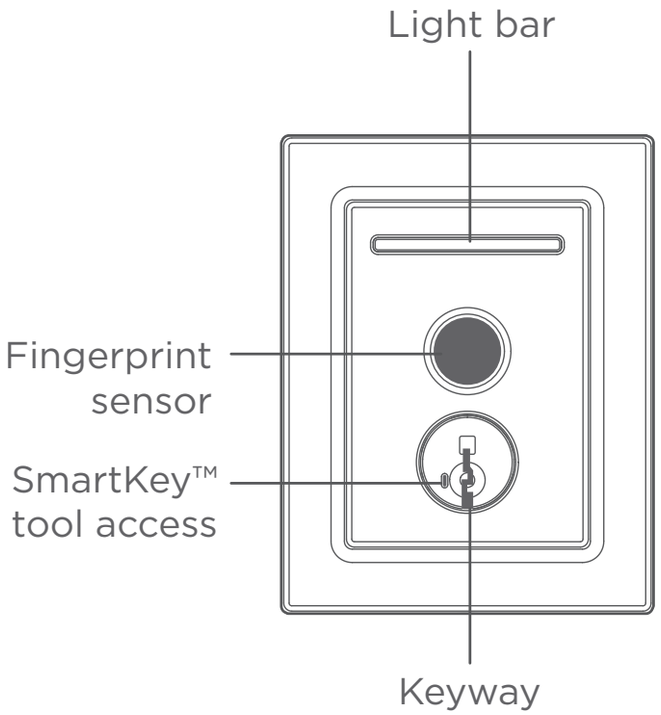

Interior
(cover removed)

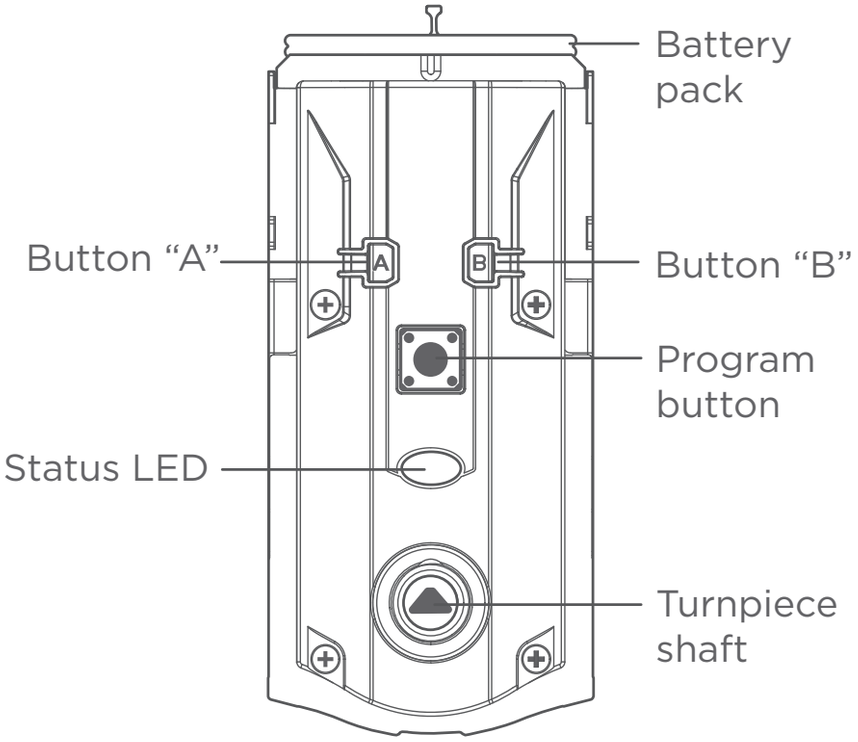

Troubleshooting

If you have any issues, please visit our support center: **kwikset.com/halo-touch** or call us at **1-800-327-5625**.

Important Safeguards

1. Read all instructions in their entirety.
2. Familiarize yourself with all warning and caution statements.
3. Remind all family members of safety precautions.
4. Always have access to your lock's standard key.
5. If using the Auto-Lock features, make sure you have your smartphone or standard key with you to prevent locking yourself out.
6. Familiarize yourself with all light bar error notifications.
7. Replace low batteries immediately.
8. Dispose of used batteries according to local laws and regulations.

⚠ **WARNING:** This Manufacturer advises that no lock can provide complete security by itself. This lock may be defeated by forcible or technical means, or evaded by entry elsewhere on the property. No lock can substitute for caution, awareness of your environment, and common sense. Builder's hardware is available in multiple performance grades to suit the application. In order to enhance security and reduce risk, you should consult a qualified locksmith or other security professional.

Regulatory Compliance

This product complies with standards established by the following regulatory bodies:

- Federal Communications Commission (FCC)
- Industry Canada

FCC

This device complies with Part 15 of the FCC Rules. Operation is subject to the following two conditions: (1) this device may not cause harmful interference, and (2) this device must accept any interference received, including interference that may cause undesired operation.

This equipment has been tested and found to comply with the limits for a Class B digital device, pursuant to Part 15 of the FCC Rules. These limits are designed to provide reasonable protection against harmful interference in a residential installation.

This equipment generates, uses, and can radiate radio frequency energy and, if not installed and used in accordance with the instructions, may cause harmful interference to radio communications. However, there is no guarantee that interference will not occur in a particular installation. If this equipment does cause harmful interference to radio or television reception, which can be determined by turning the equipment off and on, the user is encouraged to try to correct the interference by one or more of the following measures:

- Reorient or relocate the receiving antenna.
- Increase the separation between the equipment and receiver.
- Connect the equipment into an outlet on a circuit different from that to which the receiver is connected.
- Consult the dealer or an experienced radio/TV technician for help.

IMPORTANT! Changes or modifications not expressly approved by the manufacturer could void the user's authority to operate the equipment.

Industry Canada

This device contains licence-exempt transmitter(s)/ receiver(s) that comply with Innovation, Science and Economic Development Canada's licence-exempt RSS(s). Operation is subject to the following two conditions: (1) This device may not cause interference, and (2) This device must accept any interference, including interference that may cause undesired operation of the device.

Frequently Asked Questions

Door Preparation

Q: What is the door thickness requirement for Halo Touch?

A: Halo Touch supports 1-3/4” to 2” (44mm - 51mm) door thickness.

Q: Is there a door thickness kit for Halo Touch to support doors thicker than 2” (51mm)?

A: Yes, a kit (83033) is available to install Halo Touch on doors with a thickness between 2” (51mm) and 2-1/4” (57mm). Call our support center at **1-800-327-5625** to order a thick door kit.

Q: What door hole diameter is required to install Halo Touch?

A: Halo Touch requires 2-1/8” (54mm) door hole for installation.

Q: What do I need to correct a door that is warped or has been affected by weather?

A: Please refer to the **Warped Door Installation Guide** for the necessary adjustments to properly prepare your door for a smart lock installation.

Installation

Q: How do I install Halo Touch on my door?

A: Refer to the **Installation** section of this guide or follow the steps in the **Interactive Guide** to install the lock.

Q: Why is the lock performing the opposite when I'm locking or unlocking the door using the Kwikset app?

A: Perform the following steps to correct the issue:

1. Remove the cover and interior assembly from the door.
2. Put the cover back on the interior and rotate the turnpiece until the turnpiece shaft is pointing up.
3. Put the interior assembly and cover back on the door.

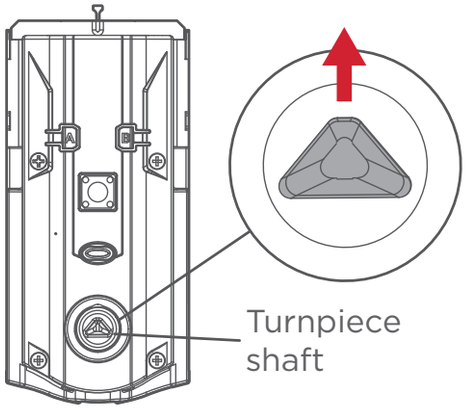

Incorrect:

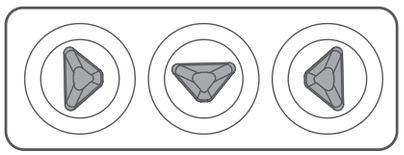

Q: What is "handing" or latch calibration?

A: Handing, or latch calibration, is the way that the smart lock learns the orientation of your door (left- or right-handed).

Q: How do I “hand” or calibrate my lock?

A1: The first time the battery is inserted, the lock will perform automatic calibration, or “handing.” You will know the handing is taking place when the latch bolt retracts and extends on its own.

A2: The first time that lock or unlock is performed using the Kwikset app, pin code, or fingerprint, the lock will automatically perform latch calibration.

A3: Perform Manual Door Handing steps.

Q: The turnpiece is difficult to turn by hand.

A: Perform Manual Door Handing steps. Upon completion, the turnpiece will be easier to turn by hand.

Q: What type of Wi-Fi network does Halo Touch require?

A: The home Wi-Fi network needs to be 2.4GHz and password protected with WPA2 encryption.

Batteries

Q: How do I replace the (4) AA batteries?

A: Complete the following steps:

1. Slide interior cover window up or remove interior cover.
2. Remove the battery pack.
3. Replace the batteries.

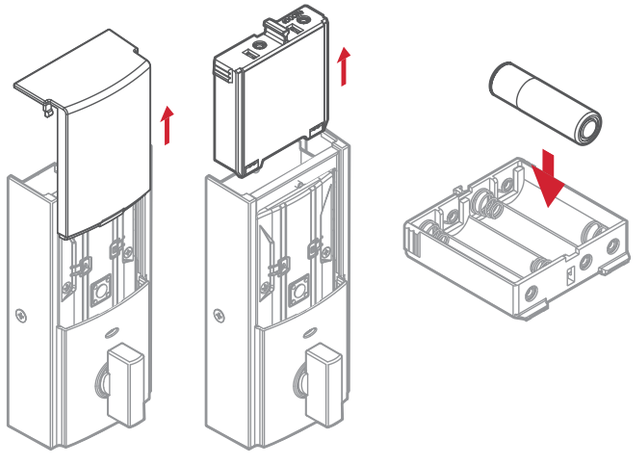

Q: How can I tell if the batteries need to be replaced?

A1: The interior status LED will blink red instead of amber when the batteries are low.

A2: The exterior LED will flash red indicating a low battery level in the deadbolt.

A3: A battery level indicator is also available in the Kwikset app, along with a notification when battery level is low.

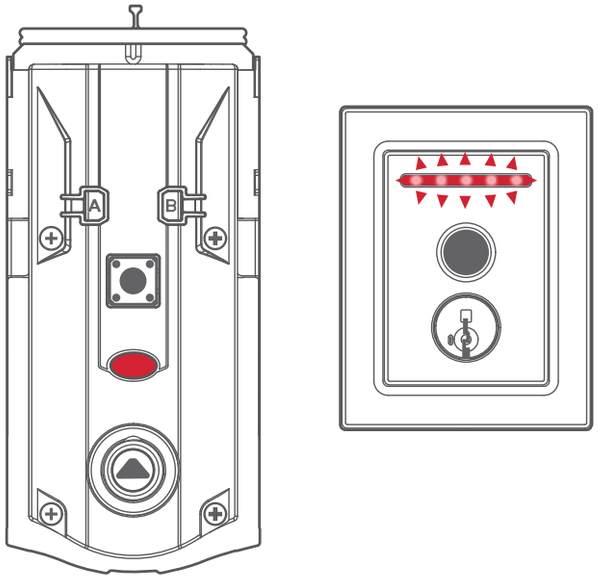

Q: What can I do if I frequently need to replace batteries?

A1: Check that the door is properly aligned. For helpful tips on getting the door to align, refer to the **Warped Door Installation Guide**. Resistance to both locking and unlocking because of door misalignment will reduce both motor and battery life.

A2: Check that the lock is properly installed, and the cable is routed and stored correctly.

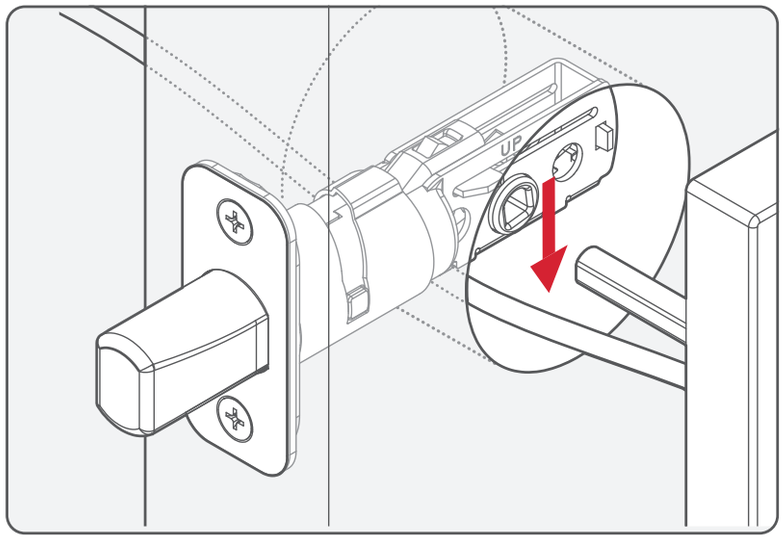

A3: Perform **Manual Door Handing** to make sure that the lock knows the correct direction for locking and unlocking.

A4: Make sure that the lock has a strong Wi-Fi connection with the router. For better Wi-Fi coverage within the home, please investigate using a mesh Wi-Fi network where several endpoints are deployed to provide the best Wi-Fi coverage.

A5: Call our support center at **1-800-327-5625** for additional help and product replacement if needed.

Kwikset App

Q: What app do I use to manage Halo Touch?

A: Kwikset App is used to manage Halo Touch as well as Halo Touchscreen, Halo Keypad, and Aura.

Q: Where can I download the Kwikset app?

A: The Kwikset App is available for free download from Google Play or App Store by searching for “Kwikset” and installing the “Kwikset Smart Lock App.”

kwikset.com/app

Download on the App Store

GET IT ON Google Play

Q: Where can I get help with the Kwikset app?

A: The Kwikset App Support page can help answer any questions you have about the Kwikset app.

Q: How do I create an account to be able to manage Halo Touch using the Kwikset app?

A: Please refer to the app tutorial for Creating Your Account.

Q: How do I create a “Home” within the Kwikset app?

A: Please refer to the app tutorial for Creating Your First Home.

Q: How do I add a lock within a “Home” in the Kwikset app?

A: Please refer to the app tutorial for Adding Your First Lock.

Q: How do I discover or pair the lock in the Kwikset app?

A: Please refer to the app tutorial for Adding Your First Lock.

Q: How do I connect to a Wi-Fi network with my lock?

A: Please refer to the app tutorial for Adding Your First Lock.

Kwikset App (continued)

Q: How do I reset my password for my Kwikset account?

A1: **If you know your current password**, complete the following steps:

1. Open the Kwikset app.
2. Tap the ☰ icon.
3. Select Account Settings.
4. Select Account.
5. Select Change Password.
6. You will be prompted to enter your old password, then the New Password fields must be filled out.

A2: **If you do not remember your password**, complete the following steps:

1. Open the Kwikset app.
2. Tap the ☰ icon.
3. Select Log Out.
4. Select Forgot Password to initiate the recovery process.

Q: How do I change my security question for my account?

A: Complete the following steps:

1. Go to **GoConcourse.com**
2. Enter your email and password.
3. Select the ☰ icon.
4. Select Change Security Questions.
5. Follow the steps to update your security question and answer.

NOTE: If prompted, select Kwikset (US) or Weiser (Canada).

Q: How do I disable my account?

A: Complete the following steps:

1. Go to **GoConcourse.com**
2. Enter your email and password.
3. Select the ☰ icon.
4. Select Enable/Disable My Account
5. Tap Disable.

Kwikset App (continued)

Q: How do I enroll the fingerprint of another person that I want to be able to use the lock?

A: Complete the following steps:

1. Open the Kwikset app.
2. Select the lock.
3. Tap on the icon.
4. Add a user fingerprint by following the instructions.

Q: How do I delete a user account?

A: Complete the following steps:

1. Open the Kwikset app.
2. Select the lock.
3. Tap on the icon.
4. Select the user you would like to delete.
5. Select Delete.

Q: How do I disable a user account?

A1: Complete the following steps:

1. Open the Kwikset app.
2. Select the lock.
3. Tap on the icon.
4. Select the user you would like to disable.
5. Toggle the option to Disable Fingerprint. This will disable the user from using their enrolled fingerprint to unlock.

A2: Another option is to enable Secure Mode which disables all enrolled fingerprints. The only way to unlock is to use the physical key. Complete the following steps:

1. Open the Kwikset app.
2. Select the lock.
3. Tap on the icon.
4. Toggle the option on Secure Mode.

Kwikset App (continued)

Q: How do I limit the access times for a user?

A: Complete the following steps:

1. Open the Kwikset app.
2. Select the lock.
3. Tap on the icon.
4. Select the user.
5. Select Schedule Type.
6. Select your desired schedule type and specify the desired access times.